CONSTRUCTION DRAWINGS FOR:

JACKSONVILLE BEACH WATER AND SEWER IMPROVEMENTS

FOR THE
CITY OF JACKSONVILLE BEACH

CITY BID No. 1920-11

ANGELA B. BRYAN
LICENSE
No. 56730
STATE OF
FLORIDA
PROFESSIONAL ENGINEER

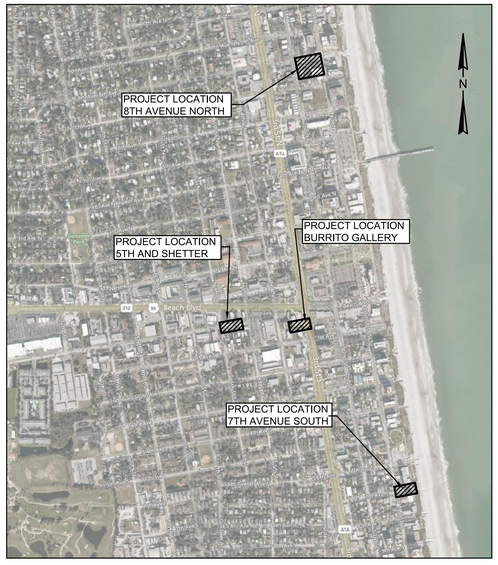

PROJECT LOCATION
AND VICINITY

PREPARED BY:

FOUR WATERS ENGINEERING
324 6th AVE N. JACKSONVILLE BEACH, FLORIDA 32250
904-414-2400 C.O.A.# 31101 WWW.4WENG.COM

PROJECT #: 20-1009

DRAWING INDEX:

	COVER SHEET AND DRAWING INDEX
G-1	GENERAL NOTES
G-2	PROJECT LOCATIONS AND VICINITY
EC-1	SHETTER AVENUE EXISTING CONDITIONS
EC-2	8TH AVENUE NORTH EXISTING CONDITIONS
C-1	7TH AVENUE SOUTH WATER IMPROVEMENTS
C-2	SHETTER AVENUE SEWER IMPROVEMENTS
C-3	8TH AVENUE NORTH SEWER IMPROVEMENTS
C-4	SEWER IMPROVEMENTS FOR BURRITO GALLERY AND VERIZON BUILDINGS
D-1	CONSTRUCTION DETAILS
D-2	CONSTRUCTION DETAILS
D-3	CONSTRUCTION DETAILS
D-4	CONSTRUCTION DETAILS
D-5	CONSTRUCTION DETAILS
D-6	CONSTRUCTION DETAILS
D-7	CONSTRUCTION DETAILS
D-8	CONSTRUCTION DETAILS
D-9	CONSTRUCTION DETAILS
MOT-1	7TH AVENUE SOUTH WATER IMPROVEMENTS - MOT
MOT-2	SHETTER AVENUE SEWER IMPROVEMENTS - MOT
MOT-3	8TH AVENUE NORTH SEWER IMPROVEMENTS - MOT

DATE: OCTOBER 2020

ISSUE: **BID**

CITY BID No. 1920-11 Jacksonville Beach Water And Sewer Improvements

STEVE DUCHARME LOCATION: R:\20--1009 JAX BCH SMALL WS\XA\DBS\COVER AND DETAILS.DWG

UTILITY SEPARATION NOTES

1. UTILITY SEPARATION FROM WATER MAINS SHALL BE IN ACCORDANCE WITH 62-555.314, FAC. ALL DISTANCES NOTED ARE FROM OUTSIDE OF PIPE TO OUTSIDE OF PIPE.

2. HORIZONTAL SEPARATION BETWEEN WATER MAIN AND STORM SEWER, STORMWATER FORCE MAIN, OR PIPELINE CONVEYING RECLAIMED WATER REGULATED UNDER PART III OF 62-610, FAC SHALL BE A MINIMUM OF THREE FEET; BETWEEN WATER MAIN AND ANY VACUUM-TYPE SANITARY SEWER SHALL BE TEN FEET (PREFERRED) BUT A MINIMUM OF THREE FEET; BETWEEN WATER MAIN AND GRAVITY OR PRESSURE-TYPE SANITARY SEWER, WASTEWATER FORCEMAIN, OR PIPELINE CONVEYING RECLAIMED WATER NOT REGULATED UNDER PART III OF 62-610, FAC SHALL BE TEN FEET (PREFERRED) BUT A MINIMUM OF SIX FEET. THE MINIMUM OF THE HORIZONTAL SEPARATION DISTANCE BETWEEN WATER MAINS AND GRAVITY-TYPE SANITARY SEWERS SHALL BE REDUCED TO THREE FEET WHERE THE BOTTOM OF THE WATER MAIN IS AT LEAST SIX INCHES ABOVE THE TOP OF THE SEWER. HORIZONTAL SEPARATION BETWEEN WATER MAIN AND ALL PARTS OF ANY "ONSITE SEWAGE TREATMENT AND DISPOSAL SYSTEM" SHALL BE A MINIMUM OF TEN FEET.

3. VERTICAL SEPARATION BETWEEN WATER MAIN AND GRAVITY OR VACUUM-TYPE SANITARY SEWER OR STORM SEWER SHALL BE LAID SO THE OUTSIDE OF THE WATER MAIN IS 12 INCHES (PREFERRED) BUT A MINIMUM OF SIX INCHES ABOVE OR AT LEAST 12 INCHES BELOW THE OTHER PIPELINE. VERTICAL SEPARATION BETWEEN WATER MAIN AND PRESSURE-TYPE SANITARY SEWER, WASTEWATER OR STORMWATER FORCE MAIN, OR PIPELINE CONVEYING RECLAIMED WATER SHALL BE LAID SO THE OUTSIDE OF THE WATER MAIN IS AT LEAST 12 INCHES ABOVE OR BELOW THE OTHER PIPELINE. PREFERENCE IS FOR THE WATER MAIN TO BE ABOVE THE OTHER PIPELINE.

4. FOR UTILITY CROSSINGS WITH WATER MAINS, ONE FULL LENGTH (20 FEET) OF WATER MAIN QUALITY PIPE SHALL BE CENTERED ABOVE OR BELOW THE OTHER PIPELINE SO THAT THE WATER MAIN JOINTS WILL BE AS FAR AS POSSIBLE FROM THE OTHER PIPELINE. WATER QUALITY PIPE STANDARD SHALL BE PVC DR18 FOR WATER MAIN. THE CONTRACTOR SHALL VERIFY, RECORD, AND REPORT THE VERTICAL SEPARATION FROM OUTSIDE OF PIPE TO OUTSIDE OF PIPE AT THE CROSSING.

5. NO WATER MAIN SHALL PASS THROUGH OR COME IN CONTACT WITH ANY PART OF A SANITARY SEWER MANHOLE, A STORM SEWER MANHOLE, OR A STORM SEWER INLET STRUCTURE.

6. NEW OR RELOCATED FIRE HYDRANTS WITH UNDERGROUND DRAINS SHALL BE LOCATED SO THAT THE DRAINS ARE AT LEAST THREE FEET FROM ANY EXISTING OR PROPOSED STORM SEWER, STORMWATER FORCE MAIN, OR PIPELINE CONVEYING RECLAIMED WATER REGULATED UNDER PART III OF 62-610, FAC; AT LEAST THREE FEET, AND PREFERABLY TEN FEET, FROM ANY EXISTING OR PROPOSED VACUUM-TYPE SANITARY SEWER; AT LEAST SIX FEET, AND PREFERABLY TEN FEET, FROM ANY EXISTING OR PROPOSED GRAVITY- OR PRESSURE-TYPE SANITARY SEWER, WASTEWATER FORCE MAIN, OR PIPELINE CONVEYING RECLAIMED WATER NOT REGULATED UNDER PART III OF 62-610, FAC; AND AT LEAST TEN FEET FROM ANY EXISTING OR PROPOSED "ONSITE SEWAGE TREATMENT AND DISPOSAL SYSTEM" AS DEFINED IN SECTION 381.0065(2), FS, AND RULE 64E-6.002, FAC

ABBREVIATIONS

A.G.	ALLEY GRATE
℄	BASE LINE
B.M.	BENCH MARK
C.B.	CATCH BASIN
C.I.	CAST IRON
℄	CENTER LINE
CLF	CHAIN LINK FENCE
CONC.	CONCRETE
CONST.	CONSTRUCTION
C.M.P.	CORRUGATED METAL PIPE
C.M.P.A.	CORRUGATED METAL PIPE ARCHED
CULV.	CULVERT
C&G	CURB & GUTTER
C	CUT
CTVB	CABLE TV BOX
D.B.I.	DITCH BOTTOM INVERT
D.W.	DRIVEWAY
D.I.	DUCTILE IRON
EC	EDGE OF CONCRETE
E.O.P.	EDGE OF PAVEMENT
ELEV.	ELEVATION
EXP. JT.	EXPANSION JOINT
F	FILL
F.H.	FIRE HYDRANT
℄	FLOW LINE
GALV.	GALVANIZED
G	GAS
GIS-GAS	INDICATES GAS MAIN INFORMATION PROVIDED BY GIS INFORMATION FROM THE CITY OF JACKSONVILLE BEACH
GIS-FM	INDICATES FORCE MAIN INFORMATION PROVIDED BY GIS INFORMATION FROM THE CITY OF JACKSONVILLE BEACH
GIS-FOC	INDICATES FIBER OPTIC CABLE INFORMATION PROVIDED BY GIS INFORMATION FROM THE CITY OF JACKSONVILLE BEACH
GIS-SAN	INDICATES GRAVITY SEWER MAIN INFORMATION PROVIDED BY GIS INFORMATION FROM THE CITY OF JACKSONVILLE BEACH
GIS-STM	INDICATES STORM WATER MAIN INFORMATION PROVIDED BY GIS INFORMATION FROM THE CITY OF JACKSONVILLE BEACH
GIS-WAT	INDICATES WATER MAIN INFORMATION PROVIDED BY GIS INFORMATION FROM THE CITY OF JACKSONVILLE BEACH
G.V.	GAS VALVE
H.W.	HEAD WALL
H.C.	HIGH CURB
INT.	INTERSECTION
INV.	INVERT
I.P.	IRON PIPE
LT.	LEFT
M.H.	MANHOLE
N.T.S.	NOT TO SCALE
O.H.L.	OVERHEAD LINES
P.R.M.	PERMANENT REFERENCE MONUMENT
P.V.C.	POLYVINYL CHLORIDE
r	RADIUS
R	RATE
R.C.P.	REINFORCED CONCRETE PIPE
RT	RIGHT
R/W	RIGHT OF WAY
R.D.	ROOF DRAIN
S/D	SIDE WALK
S.B.T.	SOUTHERN BELL TELEPHONE
STA	STATION
TJB	TELEPHONE JUNCTION BOX
TOB	TOP OF BANK
TOS	TOE OF SLOPE
U.G.E.	UNDERGROUND ELECTRIC
U.G.T.	UNDERGROUND TELEPHONE
U.S.C. & G.S.	UNITED STATES COASTAL & GEODETIC SURVEY DATUM
V.C.	VITRIFIED CLAY
WM	WATER METER
WPP	WOOD POWER POLE
W.V.	WATER VALVE

GENERAL NOTES

1. ALL ELEVATIONS BASED ON U.S.C. & G.S. DATUM AND SHOWN IN FEET.

2. ELEVATIONS:

   ALL ELEVATIONS FOR THE SURVEYED AREAS BASED ON THE NORTH AMERICAN VERTICAL DATUM (N.A.V.D.) OF 1988 PER DURDEN SURVEYING AND MAPPING, INC. 1825-B 3RD STREET NORTH, JACKSONVILLE BEACH, FL 32250 PHONE (904) 853-6822 FAX (904) 853-6825

3. COORDINATE SYSTEMS:

   THE HORIZONTAL COORDINATES FOR THE THE SURVEYED AREAS ARE BASED ON FLORIDA STATE PLANE COORDINATE SYSTEM (SPC), EAST ZONE, U.S. FEET, NORTH AMERICAN DATUM (NAD) 1983, ALL ELEVATIONS ARE BASED ON THE NORTH AMERICAN DATUM OF 1988 (NAVD88) AND ARE EXPRESSED IN FEET.

4. IN ACCORDANCE WITH GENERAL CONDITIONS, IT SHALL BE THE SOLE RESPONSIBILITY OF THE CONTRACTOR TO LOCATE AND AVOID ALL UTILITIES, OTHER STRUCTURES AND OBSTRUCTIONS BOTH ABOVE AND BELOW THE GROUND SURFACE. ALL DAMAGE RESULTING FROM THE CONTRACTOR'S FAILURE TO COMPLY WITH THIS REQUIREMENT SHALL BE REPAIRED AT THE CONTRACTORS EXPENSE.

5. THE CONTRACTOR SHALL MAINTAIN UNINTERRUPTED SERVICE AT ALL SERVICE CONNECTIONS. THE MANNER IN WHICH THIS IS ACCOMPLISHED SHALL BE LEFT TO THE DISCRETION OF THE CONTRACTOR, SUBJECT TO THE REQUIREMENTS OF THE CONTRACT SPECIFICATIONS.

6. STATIONING SHOWN ON DRAWINGS REFERS TO CENTERLINE OF ROAD OR RIGHT-OF-WAY LINE.

7. ALL PIPE LENGTHS SHOWN ON PLAN AND PROFILES ARE FROM CENTER TO CENTER OF INLETS OR MANHOLES OR ALONG FORCEMAIN OR WATER MAINS.

8. THE CONTRACTOR SHALL PROVIDE NO LESS THAN A 6 INCH CLEARANCE BETWEEN ALL UTILITIES, OTHER THAN WATER MAINS UNLESS OTHERWISE DIRECTED. NO SPECIAL PAYMENT ALLOWED.

9. MINIMUM PIPE COVER SHALL BE 30 INCHES IN UNPAVED AREAS AND 36 INCHES IN PAVED AREAS. EXCEPT AS DIRECTED.

10. CONTRACTOR SHALL EMPLOY A LAND SURVEYOR, REGISTERED IN THE STATE OF FLORIDA, TO REFERENCE AND RESTORE PROPERTY CORNERS AND LANDMARKS WHICH MAY BE DISTURBED BY CONSTRUCTION.

11. EXISTING UTILITIES HAVE BEEN SHOWN FROM THE BEST AVAILABLE INFORMATION. CONTRACTOR SHALL NOTIFY THE PROPER UTILITY REPRESENTATIVE AT LEAST 48 HOURS PRIOR TO COMMENCING EXCAVATION NEAR UTILITY. CONTRACTOR IS RESPONSIBLE FOR LOCATION OF ALL SUCH UTILITIES IN THE PATH OF CONSTRUCTION. THE LOCATION SHALL BE MADE WELL IN ADVANCE OF CONSTRUCTION SO THAT CONFLICTS IN CONSTRUCTION MAY BE RESOLVED.

12. THE DEPARTMENT OF TRANSPORTATION IS TO BE NOTIFIED 48 HOURS IN ADVANCE AND RAILROAD COMPANY 7 DAYS IN ADVANCE OF CONSTRUCTION WITHIN THEIR RESPECTIVE RIGHT OF WAY.

13. UTILITY CONTACTS
    COMCAST CABLE COMMUNICATIONS – JAMES GRAHAM (904-380-6341)
    AT&T-PK PATEL (904-727-1658)
    BEACHES ENERGY SERVICES, LIGHTING – JIM TRIMBLE (904-247-6297)
    BEACHES ENERGY SERVICES, ELECTRIC – LAMAR WHITAKER (904-247-6206)
    CITY OF JACKSONVILLE BEACH PUBLIC WORKS (WPCP&PS) – CHUCK SAUNDERS (904-588-6039)
    – JUAN COLON (904-588-6736)
    CITY OF JACKSONVILLE BEACH PUBLIC WORKS (WATER/SEWER) – DAVID McDONALD (904-247-6211)
    CITY OF JACKSONVILLE BEACH PUBLIC WORKS (STREETS/STORMWATER) – DAVID McDONALD (904-247-6211)
    CITY OF JACKSONVILLE BEACH PUBLIC WORKS (CONSTRUCTION MANAGER)–DENNIS DUPRIES (904-509-0268)
    FERRELL GAS CO. – J.D. BAIN (352-622-8298)
    TECO / PEOPLES GAS – BEN MOBLEY (904)-545-8958 (PRIMARY CONTACT)
    JAMES FARRISS (904)-669-6519 (SECONDARY CONTACT)

14. THE LOCATION(S) OF THE UTILITIES SHOWN IN THE PLANS ARE BASED ON LIMITED INVESTIGATION TECHNOLOGIES AND SHOULD BE CONSIDERED APPROXIMATE ONLY.

15. CONTACT SUNSHINE STATE ONE-CALL OF FLORIDA, INC. AS REQUIRED BY CHAPTER 556 OF THE FLORIDA STATUTES.

16. CONTRACTOR TO LOCATE, PROTECT AND SUPPORT ALL WATER, SEWER, GAS AND ELECTRIC UTILITIES ENCOUNTERED DURING CONSTRUCTION.

17. IF THE CONTRACTOR ENCOUNTERS GROUNDWATER, THE CONTRACTOR SHALL BE RESPONSIBLE FOR UTILIZING DEWATERING SYSTEM(S) TO REMOVE WATER FROM THE EXCAVATIONS. PRIOR TO BEGINNING ANY DEWATERING, THE CONTRACTOR SHALL SUBMIT A DEWATERING PLAN TO THE ENGINEER FOR REVIEW AND APPROVAL. THE CONTRACTOR SHALL COMPLY WITH SAMPLING REQUIREMENTS LISTED IN THE FLORIDA DEPARTMENT OF ENVIRONMENTAL PROTECTION (FDEP) DEWATERING REGULATIONS (62-621.300(2) F.A.C.) BEFORE ANY DEWATERING CAN BEGIN. CONTRACTOR SHALL SECURE THE FDEP GENERIC PERMIT FOR THE DISCHARGE OF GROUND WATER AND SJRWMD PERMIT, AS NECESSARY

18. THE CONTRACTOR'S ATTENTION IS DIRECTED TO THE FACT THAT THESE PLANS DO NOT STAND BY THEMSELVES. ALSO TO BE INCLUDED ARE THE SPECIFICATIONS AND DETAILS.

19. CONTRACTOR TO FURNISH DETOUR AND CONSTRUCTION SIGNING AND LIGHTING AS REQUIRED IN FLORIDA DEPARTMENT OF TRANSPORTATION MANUAL ON TRAFFIC CONTROLS AND SAFE PRACTICE FOR STREET AND HIGHWAY CONSTRUCTION, AND OTHER SPECIAL ADVANCED DETOUR SIGNS AS NECESSARY.

20. ALL POTABLE WATER PIPE SHALL BE NSFPW RATED

21. CONTRACTOR SHALL MAINTAIN WATER AND SEWER SERVICE THROUGHOUT CONSTRUCTION. SERVICE CONNECTIONS SHALL ONLY BE TRANSFERRED TO THE NEW WATER MAIN AFTER FDEP ISSUES PARTIAL CLEARANCE. CONTRACTOR SHALL PROVIDE NECESSARY FITTINGS TO TEMPORARILY ISOLATE THE EXISTING WATER MAINS THROUGHOUT CONSTRUCTION.

22. IF SOLVENT CONTAMINATION IS FOUND IN THE PIPE TRENCH, WORK SHALL BE STOPPED AND THE PROPER AUTHORITIES NOTIFIED. WITH APPROVAL OF THE PERMITTING AGENCY, DUCTILE IRON PIPE, FITTINGS AND SOLVENT RESISTANT GASKET MATERIAL SHALL BE USED IN THE CONTAMINATED AREA. THE DUCTILE IRON PIPE SHALL EXTEND AT LEAST 100 FEET BEYOND ANY SOLVENT NOTED.

23. PIPE JOINT DEFLECTION, WHERE ALLOWED BY EXCEPTION, SHALL NOT EXCEED 80% OF THE MAXIMUM RECOMMENDED BY THE MANUFACTURER FOR THE SIZE AND TYPE OF JOINT.

24. ALL PVC FORCEMAIN AND WATER MAIN PIPING SHALL HAVE A NO. 10 SOLID COPPER TRACER WIRE TAPED ALONG THE TOP OF THE PIPE. THE TRACER WIRE SHALL BE TERMINATED AT A MAXIMUM OF 500' INTERVALS WITH A GROUND LEVEL TYPE BOX/LID FOR FORCEMAIN OR AT EACH VALVE BOX FOR WATER MAIN WITH APPROXIMATELY 3' OF COILED UP WIRE INSIDE EACH BOX ALONG THE ENTIRE LENGTH OF THE FORCEMAIN OR WATER MAIN.

25. CONTRACTOR SHALL CONTACT EACH PROPERTY OWNER ALONG THE ROUTE OF NEW PIPING AND LOCATE ANY EXISTING IRRIGATION/SPRINKLER SYSTEMS. CONTRACTOR SHALL BE RESPONSIBLE FOR THE REPAIR/REPLACEMENT OF ANY DAMAGED IRRIGATION/SPRINKLER SYSTEMS ON PRIVATE PROPERTY OR CITY R.O.W'S DUE TO WORK BEING PERFORMED BY CONTRACTOR AND/OR SUB-CONTRACTORS.

26. THE CONTRACTOR SHALL SUBMIT A SHORING PLAN FOR EXCAVATIONS ADJACENT TO BUILDINGS, ADJACENT TO RIGHT-OF-WAY, OR ANY OTHER EXCAVATIONS DEEPER THAN 7 FEET. THE SHORING PLAN SHALL INCLUDE SHORING SYSTEM DESIGN CALCULATIONS AND DETAILS SIGNED AND SEALED BY A FLORIDA REGISTERED PROFESSIONAL ENGINEER.

27. ALL PROTECTED TREES SHALL BE PROTECTED FROM INJURY DURING ANY LAND CLEARING OR CONSTRUCTION. PRIOR TO ANY LAND CLEARING OR CONSTRUCTION OPERATIONS, TEMPORARY BARRIERS SHALL BE INSTALLED AROUND ALL TREES AND OTHER UNDERSCORE VEGETATION TO BE PRESERVED AND SHALL REMAIN UNTIL THE COMPLETION OF WORK. THE TEMPORARY BARRIER SHALL BE AT LEAST THREE FEET HIGH, SHALL BE PLACED AT LEAST SIX (6) FEET AWAY FROM THE BASE OF ANY TREE, SHALL INCLUDE AT LEAST FIFTY (50) PERCENT OF THE AREA UNDER THE DRIP LINE OF ANY PROTECTED TREE OR TREES. THE BARRIER SHALL CONSIST OF EITHER A WOOD FENCE WITH 2X4 POSTS PLACED A MAXIMUM OF EIGHT (8) FEET APART WITH A 2X4 MINIMUM TOP RAIL, OR A TEMPORARY WIRE MESH FENCE OR OTHER SIMILAR BARRIER WHICH WILL LIMIT ACCESS TO THE AREA, AND SHALL COMPLY WITH THE GUIDELINES IN THE TREE PROTECTION GUIDE FOR BUILDERS AND DEVELOPERS BY THE FLORIDA DIVISION OF FORESTRY, NO MATERIALS, TRAILERS, EQUIPMENT OR CHEMICALS SHALL BE STORED, OPERATED, DUMPED, BURIED OR BURNED WITHIN PROTECTED AREAS. NO ATTACHMENT WIRES (OTHER THAN PROTECTIVE GUY WIRES), SIGNS, OR PERMITS SHALL BE ATTACHED TO PROTECTED TREE.

28. TREE BARRICADE APPROVAL: OBTAIN CITY APPROVAL OF TREE BARRICADES BEFORE BEGINNING CLEARING OPERATIONS OR ANY CONSTRUCTION.

29. CONSTRUCTION ACTIVITIES DISTURBING AN AREA OF ONE (1) ACRE OR GREATER SHALL REQUIRE AN NPDES PERMIT. CONTRACTOR SHALL SUBMIT AN NOI TO FDEP PRIOR TO CONSTRUCTION

ANGELA B. BRYAN
LICENSE
No. 56730
STATE OF
FLORIDA
PROFESSIONAL ENGINEER

Signature
Angela B. Bryan, P.E. FL Professional Eng. #56730
Date

REV NO	DATE	DRWN BY	CHKD BY	DESCRIPTION
1				
2				
3				
4				
5				
6				

JACKSONVILLE BEACH WATER AND SEWER IMPROVEMENTS

GENERAL NOTES

CITY OF JACKSONVILLE BEACH
JACKSONVILLE BEACH, FLORIDA

DESIGN	ABB	DRAWN	SLD
JOB NUMBER	20-1009		
ISSUE DATE:	OCTOBER 2020		
ISSUE	BID		

FOUR WATERS ENGINEERING
324 6th AVE N. JACKSONVILLE BEACH, FLORIDA 32250
904-414-2400 C.O.A.# 31101 WWW.4WENG.COM

DRAWING NUMBER
G-1

STEVE DUCHARME LOCATION:R:\20-1009 JAX BCH SMALL WPS\A\CDS\COVER AND DETAILS.DWG

STEVE DUCHARME LOCATION R:\20-1009 JAX BCH SMALL WS\X\CDS\COVER AND DETAILS.DWG

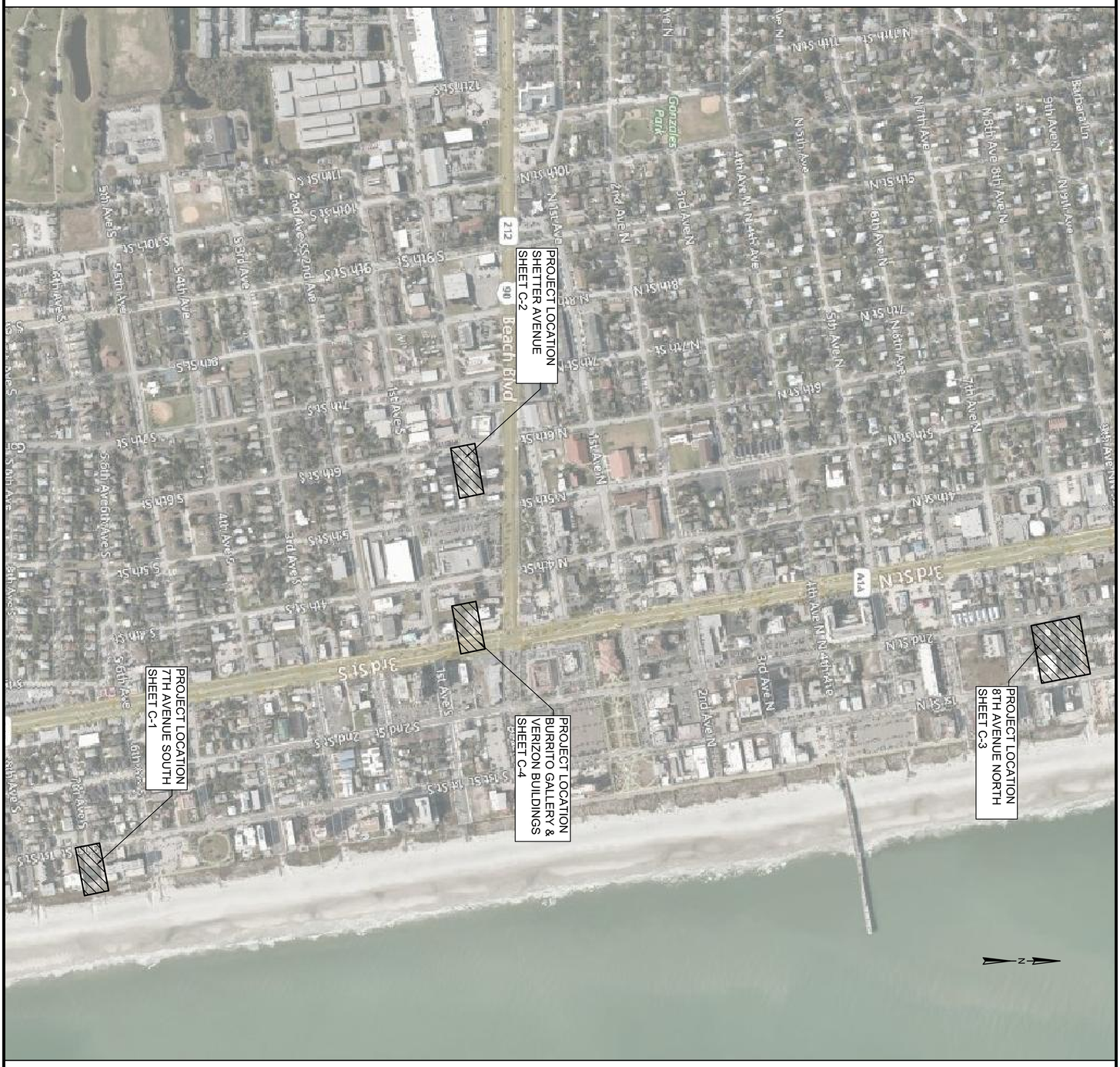

ANGELA B. BRYAN
LICENSED
PROFESSIONAL ENGINEER
STATE OF FLORIDA
No. 56730

DRAWING NUMBER
G-2

FOUR WATERS ENGINEERING
324 6th AVE N. JACKSONVILLE BEACH, FLORIDA 32250
904-414-2400 C.O.A.# 31101 WWW.4WENG.COM

DESIGN	DRAWN
ABB	SLD
JOB NUMBER	20-1009
ISSUE DATE	OCTOBER 2020
ISSUE	BID

JACKSONVILLE BEACH WATER AND SEWER IMPROVEMENTS

PROJECT LOCATIONS AND VICINITY

CITY OF JACKSONVILLE BEACH
JACKSONVILLE BEACH ,FLORIDA

REV NO	DATE	DRWN BY	CHKD BY	DESCRIPTION
1				
2				
3				
4				
5				
6				

Signature
Angela B. Bryan, P.E.
FL Professional Eng. #56730

Date

MAP SHOWING SPECIFIC TOPOGRAPHIC AND UTILITY LOCATION SURVEY OF:

SHETTER AVENUE BETWEEN 5TH STREET SOUTH AND 6TH STREET SOUTH, PABLO BEACH SOUTH, PLAT BOOK 3, PAGE 28 OF THE CURRENT PUBLIC RECORDS OF DUVAL COUNTY, FLORIDA

ANGELA B. BRYAN
LICENSE
No. 56730
STATE OF FLORIDA
PROFESSIONAL ENGINEER

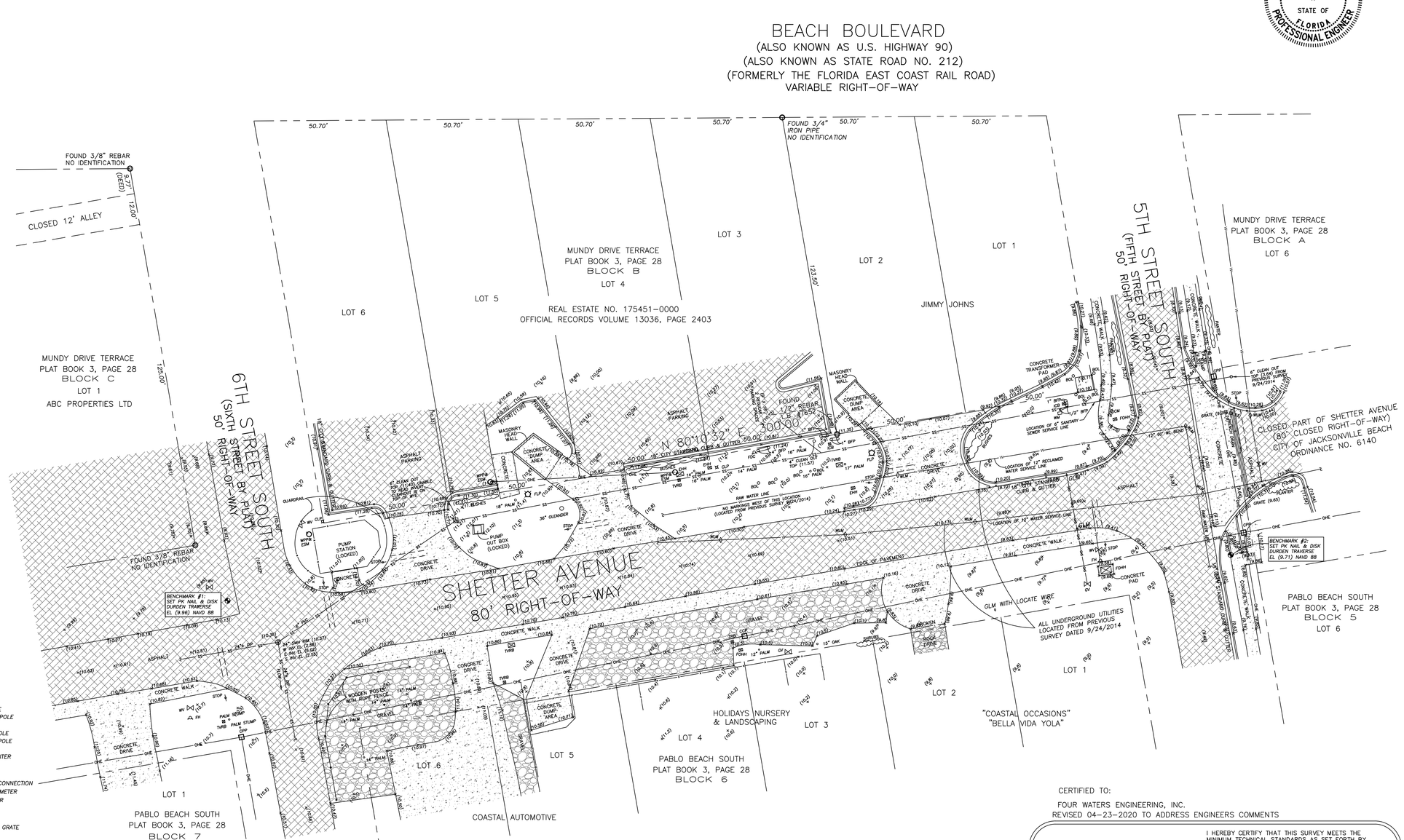

SYMBOL LEGEND:

- WPP DENOTES WOOD POWER POLE
- CPP DENOTES CONCRETE POWER POLE
- WLP DENOTES WOOD LIGHT POLE
- CLP DENOTES CONCRETE LIGHT POLE
- FLP DENOTES FIBERGLASS LIGHT POLE
- CO DENOTES CLEAN OUT
- BFP DENOTES BACK FLOW PREVENTER
- BOL DENOTES BOLLARD
- FH DENOTES FIRE HYDRANT
- FDC DENOTES FIRE DEPARTMENT CONNECTION
- ESM DENOTES ELECTRIC SERVICE METER
- WLM DENOTES WATER LINE MARKER
- GLM DENOTES GAS LINE MARKER
- GA DENOTES GUY ANCHOR
- GRATE DENOTES STORM DRAINAGE GRATE
- GV DENOTES GAS VALVE
- SMH DENOTES 24" SANITARY MANHOLE
- ICB DENOTES IRRIGATION CONTROL BOX
- EHH DENOTES ELECTRIC HAND HOLE
- FOHH DENOTES FIBER OPTIC HAND HOLE
- FOCM DENOTES FIBER OPTIC CABLE MARKER
- TRB DENOTES TELEPHONE RISER BOX
- TVRB DENOTES TELEVISION RISER BOX
- SP DENOTES STAND PIPE
- WV DENOTES WATER VALVE
- STOP DENOTES STOP SIGN
- OHE DENOTES OVERHEAD ELECTRIC
- —X— DENOTES 6' CHAIN LINK FENCE EXCEPT AS NOTED
- —//— DENOTES 6' WOOD FENCE EXCEPT AS NOTED
- —M— DENOTES METAL GUARDRAIL EXCEPT AS NOTED

UNDERGROUND UTILITY NOTE:
SUNSHINE 811 WAS CONTACTED, 05/11/2015, TO LOCATE & FLAG UNDERGROUND UTILITIES ON SITE. HOWEVER THERE WAS NO EVIDENCE THAT THEY HAD EVER FLAGGED ANY UTILITIES OR UNDERGROUND AT TIME OF SURVEY.

NOTES:
THIS IS A SPECIAL PURPOSE SURVEY AND DOES NOT PURPORT TO BE A BOUNDARY SURVEY.
BEARINGS SHOWN HEREON ARE BASED ON FLORIDA STATE PLANE COORDINATES SYSTEM, EAST ZONE, U.S. FEET, NORTH AMERICAN DATUM (N.A.V.D.) OF 1988
ELEVATIONS SHOWN AS THUS (10.46) AND ARE BASED ON THE NORTH AMERICAN VERTICAL DATUM (N.A.V.D.) OF 1988
(M) DENOTES MEASURED
THERE MAY BE ADDITIONAL RESTRICTIONS THAT ARE NOT SHOWN ON
THERE MAY BE ADDITIONAL RESTRICTIONS THAT ARE NOT SHOWN ON THIS SURVEY THAT MAY BE FOUND IN THE PUBLIC RECORDS OF DUVAL COUNTY, FLORIDA.

CERTIFIED TO:
FOUR WATERS ENGINEERING, INC.
REVISED 04-23-2020 TO ADDRESS ENGINEERS COMMENTS

SEE SHEET 1 FOR SITE SURVEY

DURDEN
SURVEYING AND MAPPING, INC.
985 11TH STREET SOUTH
JACKSONVILLE BEACH, FLORIDA 32250
(904) 853-6822 FAX 853-6825
LICENSED BUSINESS NO. 6696

I HEREBY CERTIFY THAT THIS SURVEY MEETS THE MINIMUM TECHNICAL STANDARDS AS SET FORTH BY THE FLORIDA BOARD OF LAND SURVEYORS, PURSUANT SECTION 472.027 FLORIDA STATUTES AND CHAPTER 5J17 FLORIDA ADMINISTRATIVE CODE.

FLORIDA REGISTERED SURVEYOR NO. 4707
H. BRUCE DURDEN JR.

SIGNED APRIL 1, 2020
SCALE: 1" = 20'
CAD FILE NO. SHETTER AVE INTERSECTION.DWG
WORK ORDER NUMBER: 20107 FILE NUMBER D-2088

THIS SURVEY NOT VALID UNLESS THIS PRINT IS EMBOSSED WITH THE SEAL OF THE ABOVE SIGNED.

Signature	Date
Angela B. Bryan, P.E. FL Professional Eng. #56730	

REV NO	DATE	DRWN BY	CHKD BY	DESCRIPTION
1				
2				
3				
4				
5				
6				

JACKSONVILLE BEACH WATER AND SEWER IMPROVEMENTS

SHETTER AVENUE EXISTING CONDITIONS

CITY OF JACKSONVILLE BEACH
JACKSONVILLE BEACH, FLORIDA

DESIGN	DRAWN
ABB	SLD
JOB NUMBER	20-1009
ISSUE DATE	OCTOBER 2020
ISSUE	BID

FOUR WATERS ENGINEERING
324 6th AVE N. JACKSONVILLE BEACH, FLORIDA 32250
904-414-2400 C.O.A.# 31101 WWW.4WENG.COM

DRAWING NUMBER
EC-1

STEVE DUCHARME LOCATION 8X20-1009 JAX BCH SMALL WEX\C3D\SHETTER EXIST COND.DWG

MAP SHOWING SPECIFIC TOPOGRAPHIC AND UTILITY LOCATION SURVEY OF:

8TH AVENUE NORTH BETWEEN 2ND STREET NORTH AND 1ST STREET NORTH, PABLO BEACH NORTH, PLAT BOOK 3, PAGE 28 OF THE CURRENT PUBLIC RECORDS OF DUVAL COUNTY, FLORIDA

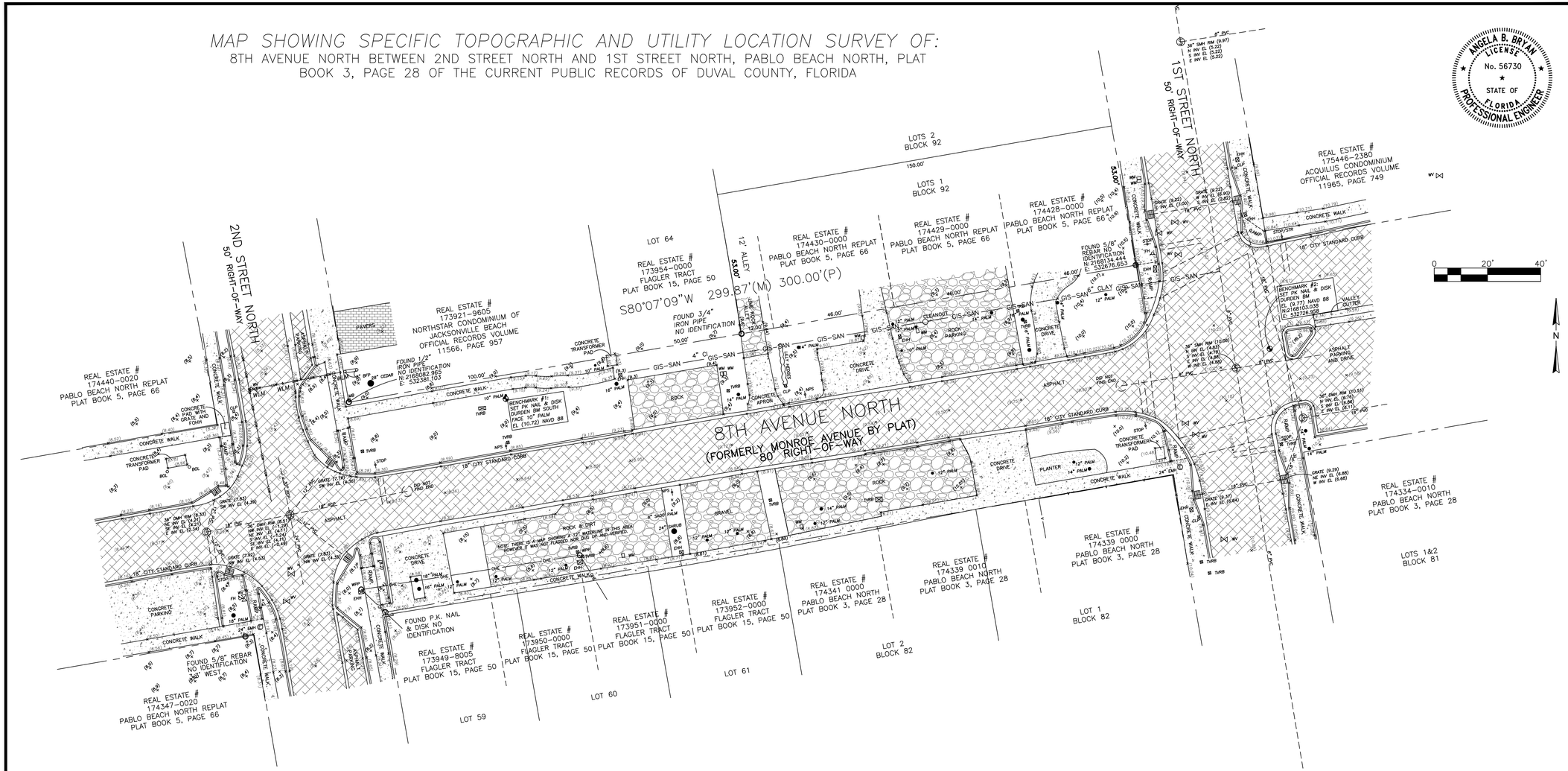

SYMBOL LEGEND:

- WPP DENOTES WOOD POWER POLE
- CLP DENOTES CONCRETE LIGHT POLE
- BFP DENOTES BACK FLOW PREVENTER
- BOL DENOTES BOLLARD
- FH DENOTES FIRE HYDRANT
- FDC DENOTES FIRE DEPARTMENT CONNECTION
- GRATE DENOTES STORM DRAINAGE GRATE
- SMH DENOTES 24" SANITARY MANHOLE
- DMH DENOTES 24" DRAINAGE MANHOLE
- EMH DENOTES 36" ELECTRIC MANHOLE
- MB DENOTES MAIL BOX
- EHH DENOTES ELECTRIC HAND HOLE
- TVRB DENOTES TELEVISION RISER BOX
- TRB DENOTES TELEPHONE RISER BOX
- WM DENOTES WATER METER
- WV DENOTES WATER VALVE
- STOP/STR DENOTES STOP/STREET SIGN
- STOP DENOTES STOP SIGN
- NPS DENOTES NO PARKING SIGN
- OHE DENOTES OVERHEAD ELECTRIC
- INV DENOTES INVERT
- EL DENOTES ELEVATION
- PVC DENOTES POLYVINYL CHLORIDE PIPE
- RCP DENOTES REINFORCED CONCRETE PIPE

REFERENCE BENCHMARK:
FOUND NGS DISK LABELED "B-324" IN EAST END CONCRETE SIGN BASE EL (10.16) NAVD 88 (NOT GRAPHICALLY SHOWN ON SURVEY)

UNDERGROUND UTILITY NOTE:
SUNSHINE 811 WAS CONTACTED, 05/11/2015, TO LOCATE & FLAG UNDERGROUND UTILITIES ON SITE. HOWEVER THERE WAS NO EVIDENCE THAT THEY HAD EVER FLAGGED ANY UTILITIES OR UNDERGROUND AT TIME OF SURVEY.

NOTES:
THIS IS A SPECIAL PURPOSE SURVEY AND DOES NOT PURPORT TO BE A BOUNDARY SURVEY.

BEARINGS SHOWN HEREON ARE BASED ON FLORIDA STATE PLANE COORDINATES SYSTEM, EAST ZONE, U.S. FEET, NORTH AMERICAN DATUM (N.A.V.D.) OF 1988

ELEVATIONS SHOWN AS THUS (8.61) AND ARE BASED ON THE NORTH AMERICAN VERTICAL DATUM (N.A.V.D.) OF 1988

—//— DENOTES 6' WOOD FENCE EXCEPT AS NOTED

—V— DENOTES 4' VINYL FENCE EXCEPT AS NOTED

(M) DENOTES MEASURED

THERE MAY BE ADDITIONAL RESTRICTIONS THAT ARE NOT SHOWN ON

THERE MAY BE ADDITIONAL RESTRICTIONS THAT ARE NOT SHOWN ON THIS SURVEY THAT MAY BE FOUND IN THE PUBLIC RECORDS OF DUVAL COUNTY, FLORIDA.

CERTIFIED TO:

FOUR WATERS ENGINEERING, INC.

REVISED 04-23-2020 TO ADDRESS ENGINEERS COMMENTS

DURDEN
SURVEYING AND MAPPING, INC.
985 11TH AVENUE SOUTH
JACKSONVILLE BEACH, FLORIDA 32250
(904) 853-6822 FAX 853-6825
LICENSED BUSINESS NO. 6696

I HEREBY CERTIFY THAT THIS SURVEY MEETS THE MINIMUM TECHNICAL STANDARDS AS SET FORTH BY THE FLORIDA BOARD OF LAND SURVEYORS, PURSUANT SECTION 472.027 FLORIDA STATUTES AND CHAPTER 5J17 FLORIDA ADMINISTRATIVE CODE.

FLORIDA REGISTERED SURVEYOR NO. 4707
H. BRUCE DURDEN JR.

SIGNED APRIL 1, 2020
SCALE: 1" = 20'
CAD FILE NO. 8TH AVE NORTH INTERSECTION.DWG
WORK ORDER NUMBER: 20106 FILE NUMBER D-2087

THIS SURVEY NOT VALID UNLESS THIS PRINT IS EMBOSSED WITH THE SEAL OF THE ABOVE SIGNED.

ANGELA B. BRYAN
LICENSE
No. 56730
STATE OF FLORIDA
PROFESSIONAL ENGINEER

REV NO	DATE	DRWN BY	CHKD BY	DESCRIPTION
1				
2				
3				
4				
5				
6				

Signature
Angela B. Bryan, P.E.
FL Professional Eng. #56730

Date

JACKSONVILLE BEACH WATER AND SEWER IMPROVEMENTS

8TH AVENUE NORTH EXISTING CONDITIONS

CITY OF JACKSONVILLE BEACH
JACKSONVILLE BEACH, FLORIDA

DESIGN	DRAWN
ABB	SLD
JOB NUMBER	20-1009
ISSUE DATE	OCTOBER 2020
ISSUE	BID

FOUR WATERS ENGINEERING
324 6th AVE N. JACKSONVILLE BEACH, FLORIDA 32250
904-414-2400 C.O.A.# 31101 WWW.4WENG.COM

DRAWING NUMBER
EC-2

STEVE BUCHANAN LOCATION R:\20-1009 JAX BCH SMALL WS\X\CDS\8TH AVE NORTH EXIST COND.DWG

NOTES:

1. CONTRACTOR SHALL VERIFY ALL UTILITIES BEFORE CONSTRUCTION. NOTIFY ENGINEER IMMEDIATELY IF UTILITY CONFLICT MAY OCCUR.
2. CONTRACTOR SHALL CONNECT ALL NEW WATER SERVICES AFTER DEP CLEARANCE HAS BEEN ISSUED BY DEPARTMENT.
3. IF THE CONTRACTOR ENCOUNTERS GROUNDWATER, THE CONTRACTOR SHALL BE RESPONSIBLE FOR UTILIZING DEWATERING SYSTEM(S) TO REMOVE WATER FROM THE EXCAVATIONS. PRIOR TO BEGINNING ANY DEWATERING, THE CONTRACTOR SHALL SUBMIT A DEWATERING PLAN TO THE CITY REPRESENTATIVES FOR REVIEW AND APPROVAL. THE CONTRACTOR SHALL COMPLY WITH SAMPLING REQUIREMENTS LISTED IN THE FLORIDA DEPARTMENT OF ENVIRONMENTAL PROTECTION (FDEP) DEWATERING REGULATIONS (62-621.300(2) F.A.C.) BEFORE ANY DEWATERING CAN BEGIN.
4. REMOVAL AND REPLACEMENT OF CONCRETE DRIVEWAY,CURB AND GUTTER, OR SIDEWALK SHALL BE FROM NEAREST CONCRETE JOINT TO CONCRETE JOINT OR FROM NEAREST CONCRETE JOINT TO EDGE OF CONCRETE CURB. CONTRACTOR SHALL INSTALL 1/2" EXPANSION JOINTS AND/OR CONTROL JOINTS FOR ALL CONCRETE SECTIONS. CONCRETE DRIVEWAYS SHALL BE A MINIMUM THICKNESS OF 6" 3000 PSI CONCRETE WITH FIBER MESH. CONCRETE SIDEWALKS SHALL BE A MINIMUM THICKNESS OF 4" 3000 PSI CONCRETE WITH FIBER MESH. CONCRETE SHALL BE INSTALLED PER DETAILS AND SPECIFICATIONS.
5. CONTRACTOR IS RESPONSIBLE TO RESTORE ALL ITEMS IN RIGHT OF WAY TO EXISTING OR BETTER CONDITION AFTER CONSTRUCTION ACTIVITIES.
6. CONTRACTOR SHALL CONTACT EACH PROPERTY OWNER ALONG THE ROUTE OF NEW PIPING AND CONSTRUCTION AND LOCATE ANY EXISTING IRRIGATION/SPRINKLER SYSTEMS ON PRIVATE PROPERTY OR CITY R.O.W.'S DUE TO WORK BEING PERFORMED BY CONTRACTOR AND/OR SUB-CONTRACTORS.
7. CONTRACTOR SHALL BE RESPONSIBLE FOR STABILIZATION OF ALL DISTURBED AREAS WITHIN PROJECT LIMITS WITH SOD MATCHED TO EXISTING LAWN TYPE. CONTRACTOR RESPONSIBLE FOR WATERING SOD WITHIN 24 HOURS OF PLACING SOD AND AS NECESSARY FOR PERMANENT VEGETATION
8. CONTRACTOR IS RESPONSIBLE FOR PROVIDING ALL NECESSARY MAINTENANCE OF TRAFFIC (VEHICULAR AND PEDESTRIAN) IN ACCORDANCE WITH THE CITY OF JACKSONVILLE BEACH FOR CITY RIGHT-OF-WAYS AND FDOT FOR FDOT RIGHT-OF-WAYS.
9. CONTRACTOR IS RESPONSIBLE TO LOCATE, IDENTIFY, AND PLAN FOR ALL SEWER LATERAL CROSSINGS.
10. OPEN CUTTING DRIVEWAYS: WHEN OPEN CUTTING DRIVEWAYS, 1) NOTIFY USERS SEVEN (7) DAYS IN ADVANCE USING DOOR-HANGER TYPE NOTICES OR ON-SITE SIGNS AS APPROPRIATE AND APPROVED BY CITY. 2) MAINTAIN USER'S ACCESS TO THE PROPERTY. 3) RESTORE THE DRIVEWAYS TO AT LEAST AN EQUIVALENT CONDITION AND TYPES OF MATERIAL TO WHAT EXISTED PRIOR TO CUTTING.

1ST STREET SOUTH
60' RIGHT OF WAY

REAL ESTATE #
176012-5000
601 S 1ST STREET
LAS BRISAS CONDOMINIUM
ASSOCIATION

7TH AVENUE SOUTH
80' RIGHT OF WAY

REAL ESTATE #
176045-0100
7077 S 1ST STREET
SANDCASTLE CONDOMINIUM
ASSOCIATION

FURNISH AND INSTALL (1) 8" DI MJ PLUG WITH TAPPED 2" DEAD END WITH RESTRAINTS. SEE DETAIL SHEET D-2

N:2162676.3228
E:533776.2944
FURNISH AND INSTALL (1) 8"X6" DI MJ TEE, AND (1) 6" DI MJ PLUG FOR 6" FIRE SERVICE

FURNISH AND INSTALL 15 LF OF 2" PVC (SDR21) WATER MAIN BY OPEN CUT

FURNISH AND INSTALL 1" WATER METER SERVICE AND BOX. SEE DETAIL SHEET D-1

EXISTING CONCRETE PAD

FURNISH AND INSTALL 2" FLUSHING VALVE ASSEMBLY. SEE DETAIL SHEET D-2

FURNISH AND INSTALL 137 LF OF 8" PVC (DR18) WATER MAIN BY OPEN CUT

N:2162673.7048
E:533760.7782
FURNISH AND INSTALL (1) 8"X4" DI MJ TEE FOR 4" WATER SERVICE ASSEMBLY

8" WATER MAIN TO BE INSTALLED WITH MINIMUM COVER (36") UNDER 1ST STREET SOUTH TO ACCOMMODATE FUTURE STORMWATER IMPROVEMENTS

EXISTING "NO PARKING" SIGN

EXISTING 11" PALM TREE

EXISTING 14" PALM TREE

EXISTING 11" PALM TREE

(3) PALM TREES TO BE REMOVED

FURNISH AND INSTALL 110 LF OF 1" POLYTUBE (SDR9) WATER SERVICE BY OPEN CUT, (1) 2"X1" SERVICE SADDLE, (1) 1" CURB COCK BALL TYPE, AND (1) 1" CURB STOP BALL TYPE

LIMIT OF CONSTRUCTION FOR 6" FIRE SERVICE

ROUTE WATER SERVICE AROUND SIGN AS NECESSARY

FURNISH AND INSTALL (4) 8" DI MJ 45° BENDS FOR CASE "B" WATER MAIN INSTALLATION UNDER 8" RCP STORM AS NECESSARY. 18" MIN VERTICAL SEPARATION. SEE DETAIL SHEET D-1

FURNISH AND INSTALL 4" WATER SERVICE ASSEMBLY. SEE INSET "A" AND DETAIL SHEET D-2 FOR REQUIREMENTS

N:2162654.6540
E:533642.2989
FURNISH AND INSTALL (1) 8"X8" STAINLESS STEEL TAPPING SLEEVE AND VALVE WITH BOX AND COVER

MINIMUM 6" VERTICAL CLEARANCE FROM UGE (TYP)

REMOVE AND RESTORE CONCRETE SIDEWALK FROM NEAREST JOINT TO NEAREST JOINT (~4 SY) AND RAMP AS NECESSARY FOR WATER MAIN INSTALLATION. SEE DETAIL SHEETS D-5 AND SHEET D-6

REMOVE AND RESTORE CONCRETE CURB AND GUTTER (~8 LF) AS NECESSARY FOR WATER MAIN INSTALLATION. SEE DETAIL SHEET D-7

REMOVE AND RESTORE ASPHALT PAVEMENT (~25 SY) AND PAVEMENT MARKINGS FOR WATER MAIN INSTALLATION. SEE DETAIL SHEET D-7

SCALE IN FEET 0 10' 20'

INSET A

SCALE IN FEET 0 2' 4'

4" C900 PVC (DR18) (TYP)
4" DI MJ 90° BEND
(3) 4" MJ GATE VALVE WITH BOX AND COVER
18" MIN
135"
4"X4" DI MJ TEE
4" MJ GATE VALVE WITH BOX AND COVER
4"X3" DI MJ CONCENTRIC REDUCER
4" DI MJ PLUG
12" MIN
36" MIN
~86" FROM BOC TO WALL
18" OFF BOC
3" PVC (SDR21) (TYP)
LIMIT OF CONSTRUCTION FOR 4" WATER SERVICE
SEE DETAIL SHEET D-2 FOR WATER METER BOX DETAIL

ANGELA B. BRYAN LICENSE No. 56730 STATE OF FLORIDA PROFESSIONAL ENGINEER

REV NO	DATE	DRWN BY	CHKD BY	DESCRIPTION
1				
2				
3				
4				
5				
6				

Signature
Angela B. Bryan, P.E.
FL Professional Eng. #56730

Date

JACKSONVILLE BEACH WATER AND SEWER IMPROVEMENTS

7TH AVENUE SOUTH WATER IMPROVEMENTS

CITY OF JACKSONVILLE BEACH
JACKSONVILLE BEACH, FLORIDA

DESIGN	DRAWN
ABB	SLD
JOB NUMBER	20-1009
ISSUE DATE	OCTOBER 2020
ISSUE	BID

FOUR WATERS ENGINEERING
324 6th AVE N. JACKSONVILLE BEACH, FLORIDA 32250
904-414-2400 C.O.A.# 31101 WWW.4WENG.COM

DRAWING NUMBER
C-1

STEVE BUCHANAN LOCATION: R:\20-1009 JAX BCH SMALL WS\V\20SYTH ONLY.DWG

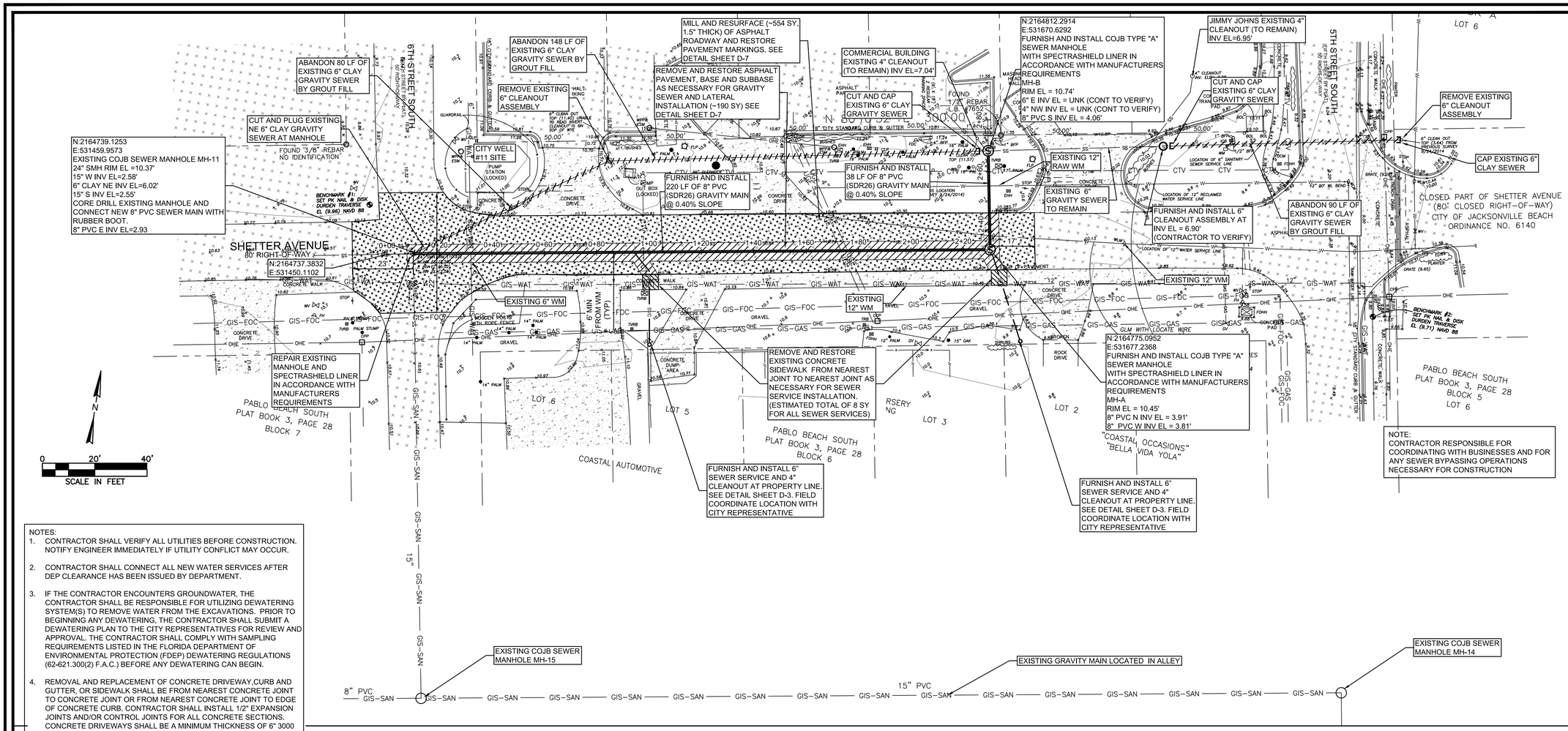

NOTES:

1. CONTRACTOR SHALL VERIFY ALL UTILITIES BEFORE CONSTRUCTION. NOTIFY ENGINEER IMMEDIATELY IF UTILITY CONFLICT MAY OCCUR.
2. CONTRACTOR SHALL CONNECT ALL NEW WATER SERVICES AFTER DEP CLEARANCE HAS BEEN ISSUED BY DEPARTMENT.
3. IF THE CONTRACTOR ENCOUNTERS GROUNDWATER, THE CONTRACTOR SHALL BE RESPONSIBLE FOR UTILIZING DEWATERING SYSTEM(S) TO REMOVE WATER FROM THE EXCAVATIONS. PRIOR TO BEGINNING ANY DEWATERING, THE CONTRACTOR SHALL SUBMIT A DEWATERING PLAN TO THE CITY REPRESENTATIVES FOR REVIEW AND APPROVAL. THE CONTRACTOR SHALL COMPLY WITH SAMPLING REQUIREMENTS LISTED IN THE FLORIDA DEPARTMENT OF ENVIRONMENTAL PROTECTION (FDEP) DEWATERING REGULATIONS (62-621.300(2) F.A.C.) BEFORE ANY DEWATERING CAN BEGIN.
4. REMOVAL AND REPLACEMENT OF CONCRETE DRIVEWAY,CURB AND GUTTER, OR SIDEWALK SHALL BE FROM NEAREST CONCRETE JOINT TO CONCRETE JOINT OR FROM NEAREST CONCRETE JOINT TO EDGE OF CONCRETE CURB. CONTRACTOR SHALL INSTALL 1/2" EXPANSION JOINTS AND/OR CONTROL JOINTS FOR ALL CONCRETE SECTIONS. CONCRETE DRIVEWAYS SHALL BE A MINIMUM THICKNESS OF 6" 3000 PSI CONCRETE WITH FIBER MESH. CONCRETE SIDEWALKS SHALL BE A MINIMUM THICKNESS OF 4" 3000 PSI CONCRETE WITH FIBER MESH. CONCRETE SHALL BE INSTALLED PER DETAILS AND SPECIFICATIONS.
5. CONTRACTOR IS RESPONSIBLE TO RESTORE ALL ITEMS IN RIGHT OF WAY TO EXISTING OR BETTER CONDITION AFTER CONSTRUCTION ACTIVITIES.
6. CONTRACTOR SHALL CONTACT EACH PROPERTY OWNER ALONG THE ROUTE OF NEW PIPING AND CONSTRUCTION AND LOCATE ANY EXISTING IRRIGATION/SPRINKLER SYSTEMS ON PRIVATE PROPERTY OR CITY R.O.W.'S DUE TO WORK BEING PERFORMED BY CONTRACTOR AND/OR SUB-CONTRACTORS.
7. CONTRACTOR SHALL BE RESPONSIBLE FOR STABILIZATION OF ALL DISTURBED AREAS WITHIN PROJECT LIMITS WITH SOD MATCHED TO EXISTING LAWN TYPE. CONTRACTOR RESPONSIBLE FOR WATERING SOD WITHIN 24 HOURS OF PLACING SOD AND AS NECESSARY FOR PERMANENT VEGETATION
8. CONTRACTOR IS RESPONSIBLE FOR PROVIDING ALL NECESSARY MAINTENANCE OF TRAFFIC (VEHICULAR AND PEDESTRIAN) IN ACCORDANCE WITH THE CITY OF JACKSONVILLE BEACH FOR CITY RIGHT-OF-WAYS AND FDOT FOR FDOT RIGHT-OF-WAYS.
9. CONTRACTOR IS RESPONSIBLE TO LOCATE, IDENTIFY, AND PLAN FOR ALL SEWER LATERAL CROSSINGS.
10. OPEN CUTTING DRIVEWAYS: WHEN OPEN CUTTING DRIVEWAYS, 1) NOTIFY USERS SEVEN (7) DAYS IN ADVANCE USING DOOR-HANGER TYPE NOTICES OR ON-SITE SIGNS AS APPROPRIATE AND APPROVED BY CITY. 2) MAINTAIN USER'S ACCESS TO THE PROPERTY. 3) RESTORE THE DRIVEWAYS TO AT LEAST AN EQUIVALENT CONDITION AND TYPES OF MATERIAL TO WHAT EXISTED PRIOR TO CUTTING.

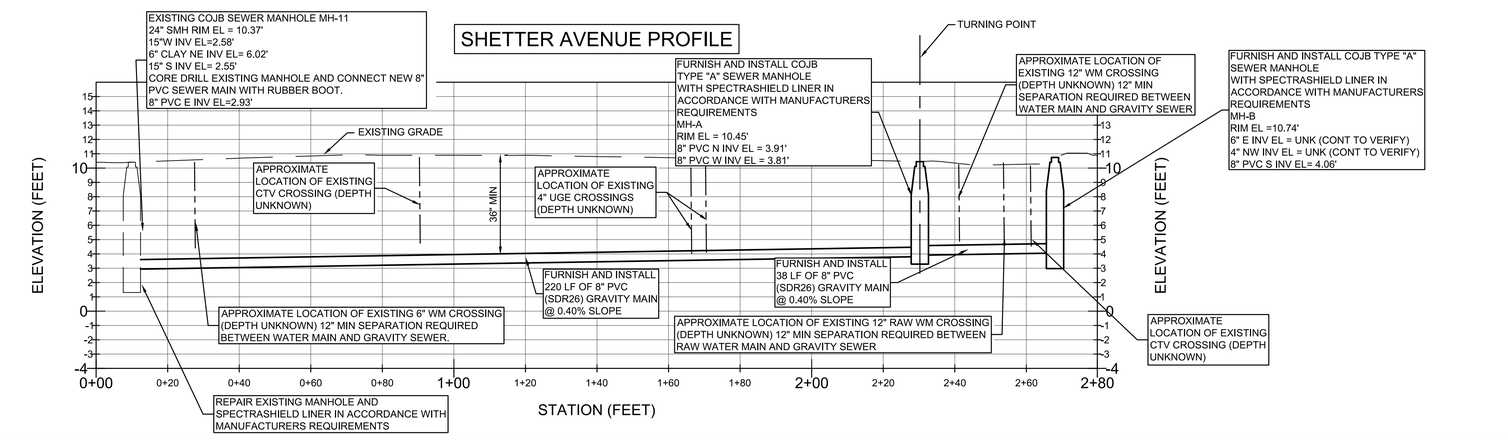

ANGELA B. BRYAN LICENSE No. 56730 STATE OF FLORIDA PROFESSIONAL ENGINEER

REV NO	DATE	DRWN BY	CHKD BY	DESCRIPTION
1				
2				
3				
4				
5				
6				

Signature
Angela B. Bryan, P.E.
FL Professional Eng. #56730
Date

JACKSONVILLE BEACH WATER AND SEWER IMPROVEMENTS

SHETTER AVENUE SEWER IMPROVEMENTS

CITY OF JACKSONVILLE BEACH
JACKSONVILLE BEACH, FLORIDA

DESIGN	DRAWN	
ABB	SLD	
JOB NUMBER	20-1009	
ISSUE DATE	OCTOBER 2020	
ISSUE	BID	

FOUR WATERS ENGINEERING
324 6th AVE N. JACKSONVILLE BEACH, FLORIDA 32250
904-414-2400 C.O.A.# 31101 WWW.4WENG.COM

DRAWING NUMBER
C-2

STEVE DUCHARME LOCATION R:\20-1009 JAX BCH SMALL WS\X\C02\STH AND SHETTER.DWG

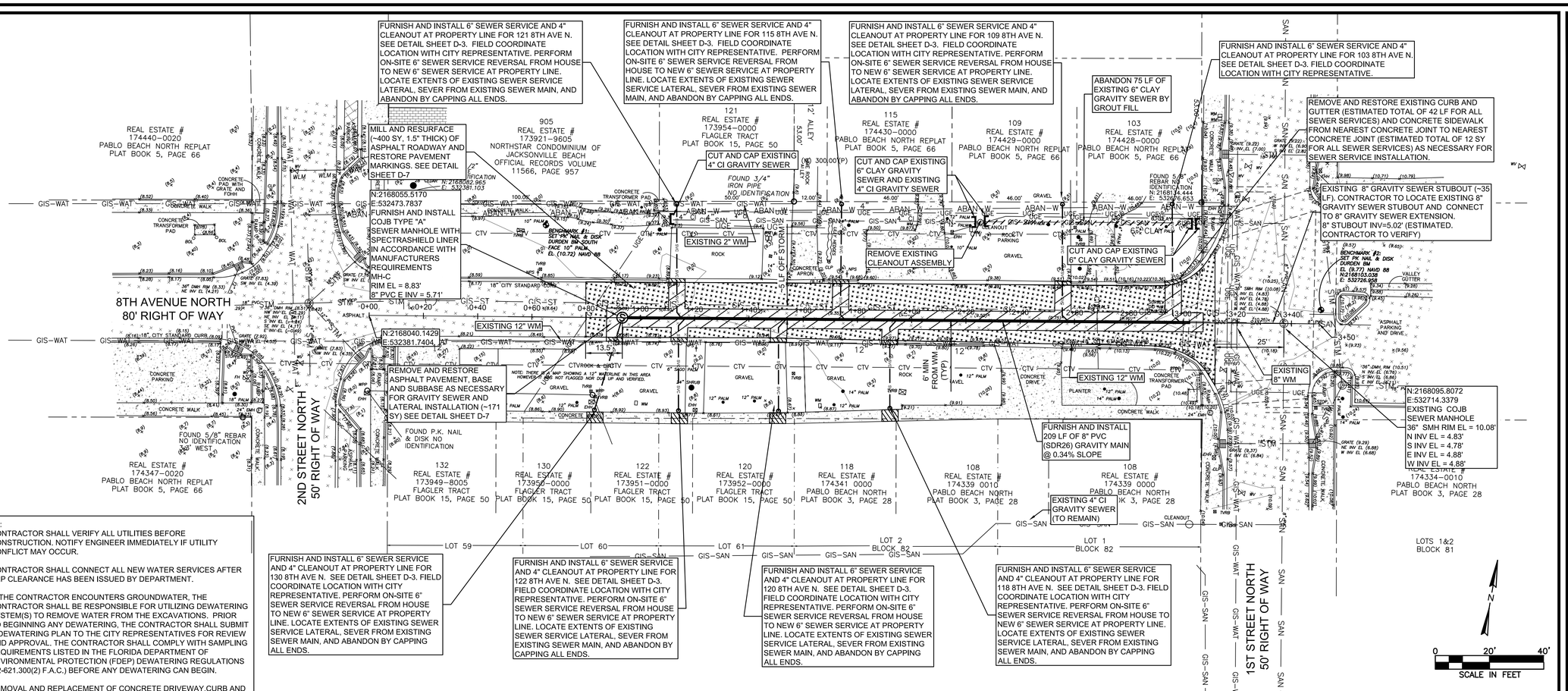

NOTES:

1. CONTRACTOR SHALL VERIFY ALL UTILITIES BEFORE CONSTRUCTION. NOTIFY ENGINEER IMMEDIATELY IF UTILITY CONFLICT MAY OCCUR.
2. CONTRACTOR SHALL CONNECT ALL NEW WATER SERVICES AFTER DEP CLEARANCE HAS BEEN ISSUED BY DEPARTMENT.
3. IF THE CONTRACTOR ENCOUNTERS GROUNDWATER, THE CONTRACTOR SHALL BE RESPONSIBLE FOR UTILIZING DEWATERING SYSTEM(S) TO REMOVE WATER FROM THE EXCAVATIONS. PRIOR TO BEGINNING ANY DEWATERING, THE CONTRACTOR SHALL SUBMIT A DEWATERING PLAN TO THE CITY REPRESENTATIVES FOR REVIEW AND APPROVAL. THE CONTRACTOR SHALL COMPLY WITH SAMPLING REQUIREMENTS LISTED IN THE FLORIDA DEPARTMENT OF ENVIRONMENTAL PROTECTION (FDEP) DEWATERING REGULATIONS (62-621.300(2) F.A.C.) BEFORE ANY DEWATERING CAN BEGIN.
4. REMOVAL AND REPLACEMENT OF CONCRETE DRIVEWAY,CURB AND GUTTER, OR SIDEWALK SHALL BE FROM NEAREST CONCRETE JOINT TO CONCRETE JOINT OR FROM NEAREST CONCRETE JOINT TO EDGE OF CONCRETE CURB. CONTRACTOR SHALL INSTALL 1/2" EXPANSION JOINTS AND/OR CONTROL JOINTS FOR ALL CONCRETE SECTIONS. CONCRETE DRIVEWAYS SHALL BE A MINIMUM THICKNESS OF 6" 3000 PSI CONCRETE WITH FIBER MESH. CONCRETE SIDEWALKS SHALL BE A MINIMUM THICKNESS OF 4" 3000 PSI CONCRETE WITH FIBER MESH. CONCRETE SHALL BE INSTALLED PER DETAILS AND SPECIFICATIONS.
5. CONTRACTOR IS RESPONSIBLE TO RESTORE ALL ITEMS IN RIGHT OF WAY TO EXISTING OR BETTER CONDITION AFTER CONSTRUCTION ACTIVITIES.
6. CONTRACTOR SHALL CONTACT EACH PROPERTY OWNER ALONG THE ROUTE OF NEW PIPING AND CONSTRUCTION AND LOCATE ANY EXISTING IRRIGATION/SPRINKLER SYSTEMS ON PRIVATE PROPERTY OR CITY R.O.W.'S DUE TO WORK BEING PERFORMED BY CONTRACTOR AND/OR SUB-CONTRACTORS.
7. CONTRACTOR SHALL BE RESPONSIBLE FOR STABILIZATION OF ALL DISTURBED AREAS WITHIN PROJECT LIMITS WITH SOD MATCHED TO EXISTING LAWN TYPE. CONTRACTOR RESPONSIBLE FOR WATERING SOD WITHIN 24 HOURS OF PLACING SOD AND AS NECESSARY FOR PERMANENT VEGETATION
8. CONTRACTOR IS RESPONSIBLE FOR PROVIDING ALL NECESSARY MAINTENANCE OF TRAFFIC (VEHICULAR AND PEDESTRIAN) IN ACCORDANCE WITH THE CITY OF JACKSONVILLE BEACH FOR CITY RIGHT-OF-WAYS AND FDOT FOR FDOT RIGHT-OF-WAYS.
9. CONTRACTOR IS RESPONSIBLE TO LOCATE, IDENTIFY, AND PLAN FOR ALL SEWER LATERAL CROSSINGS.
10. OPEN CUTTING DRIVEWAYS: WHEN OPEN CUTTING DRIVEWAYS, 1) NOTIFY USERS SEVEN (7) DAYS IN ADVANCE USING DOOR-HANGER TYPE NOTICES OR ON-SITE SIGNS AS APPROPRIATE AND APPROVED BY CITY. 2) MAINTAIN USER'S ACCESS TO THE PROPERTY. 3) RESTORE THE DRIVEWAYS TO AT LEAST AN EQUIVALENT CONDITION AND TYPES OF MATERIAL TO WHAT EXISTED PRIOR TO CUTTING.

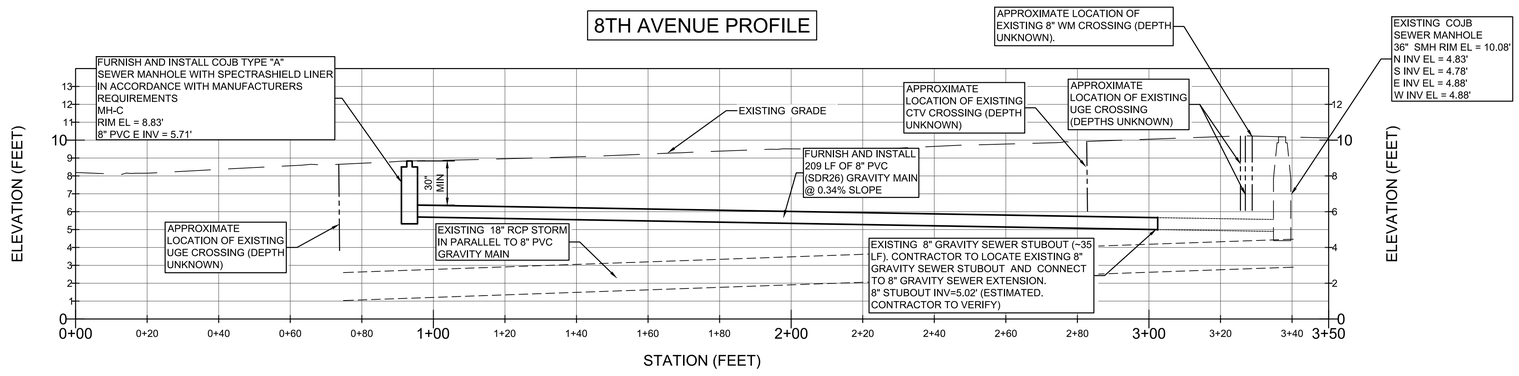

ANGELA B. BRYAN LICENSE No. 56730 STATE OF FLORIDA PROFESSIONAL ENGINEER

REV NO	DATE	DRWN BY	CHKD BY	DESCRIPTION
1				
2				
3				
4				
5				
6				

Signature
Angela B. Bryan, P.E.
FL Professional Eng. #56730
Date

JACKSONVILLE BEACH WATER AND SEWER IMPROVEMENTS

8TH AVENUE NORTH SEWER IMPROVEMENTS

CITY OF JACKSONVILLE BEACH
JACKSONVILLE BEACH, FLORIDA

DESIGN	DRAWN	ISSUE	BID
ABB	SLD		
JOB NUMBER	20-1009		
ISSUE DATE	OCTOBER 2020		

FOUR WATERS ENGINEERING
324 6th AVE N. JACKSONVILLE BEACH, FLORIDA 32250
904-414-2400 C.O.A.# 31101 WWW.4WENG.COM

DRAWING NUMBER
C-3

STEVE BUCHANAN LOCATION: R:\20-1009 JAX BCH SMALL WS\X\CDS\8TH.DWG

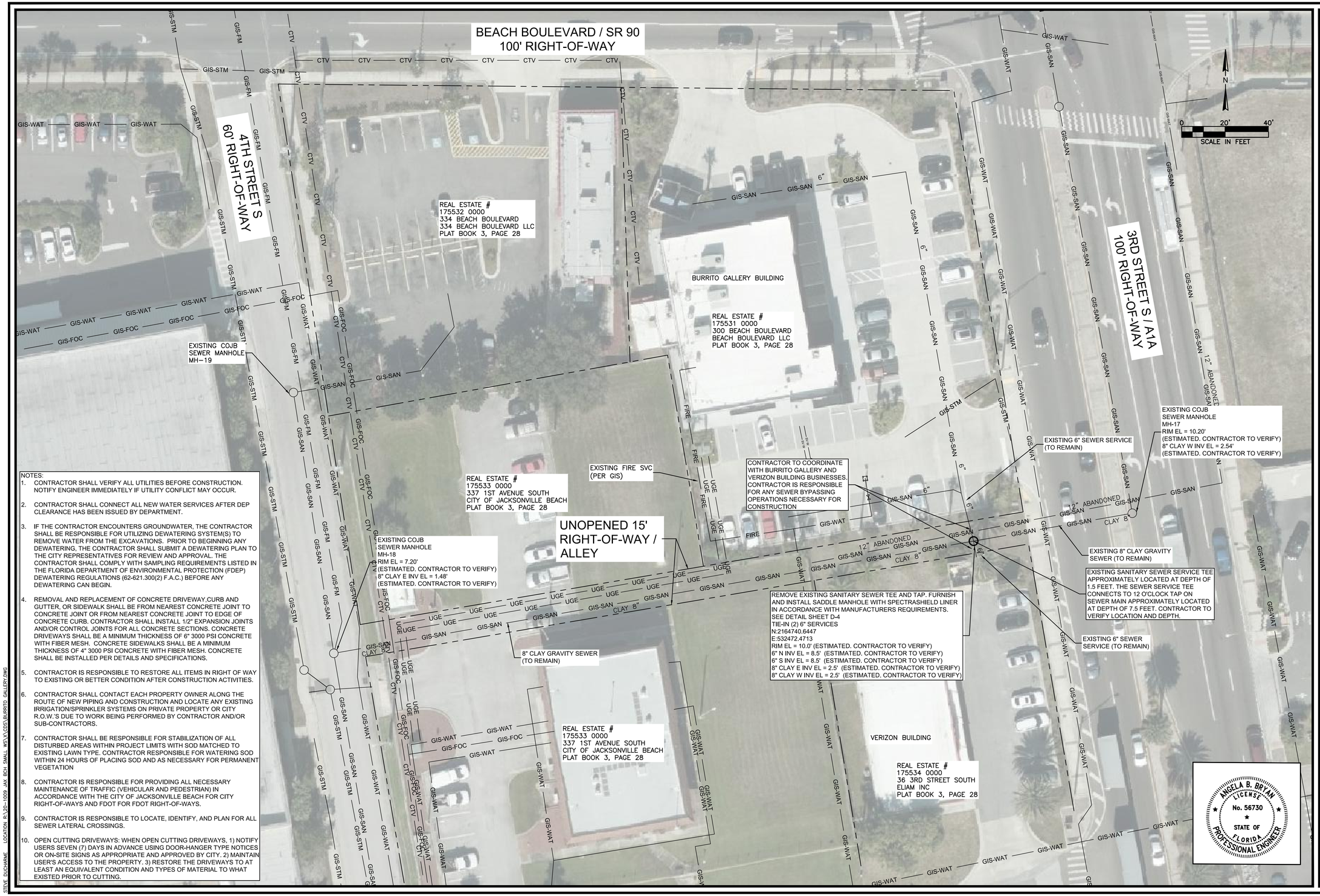

NOTES:

1. CONTRACTOR SHALL VERIFY ALL UTILITIES BEFORE CONSTRUCTION. NOTIFY ENGINEER IMMEDIATELY IF UTILITY CONFLICT MAY OCCUR.
2. CONTRACTOR SHALL CONNECT ALL NEW WATER SERVICES AFTER DEP CLEARANCE HAS BEEN ISSUED BY DEPARTMENT.
3. IF THE CONTRACTOR ENCOUNTERS GROUNDWATER, THE CONTRACTOR SHALL BE RESPONSIBLE FOR UTILIZING DEWATERING SYSTEM(S) TO REMOVE WATER FROM THE EXCAVATIONS. PRIOR TO BEGINNING ANY DEWATERING, THE CONTRACTOR SHALL SUBMIT A DEWATERING PLAN TO THE CITY REPRESENTATIVES FOR REVIEW AND APPROVAL. THE CONTRACTOR SHALL COMPLY WITH SAMPLING REQUIREMENTS LISTED IN THE FLORIDA DEPARTMENT OF ENVIRONMENTAL PROTECTION (FDEP) DEWATERING REGULATIONS (62-621.300(2) F.A.C.) BEFORE ANY DEWATERING CAN BEGIN.
4. REMOVAL AND REPLACEMENT OF CONCRETE DRIVEWAY,CURB AND GUTTER, OR SIDEWALK SHALL BE FROM NEAREST CONCRETE JOINT TO CONCRETE JOINT OR FROM NEAREST CONCRETE JOINT TO EDGE OF CONCRETE CURB. CONTRACTOR SHALL INSTALL 1/2" EXPANSION JOINTS AND/OR CONTROL JOINTS FOR ALL CONCRETE SECTIONS. CONCRETE DRIVEWAYS SHALL BE A MINIMUM THICKNESS OF 6" 3000 PSI CONCRETE WITH FIBER MESH. CONCRETE SIDEWALKS SHALL BE A MINIMUM THICKNESS OF 4" 3000 PSI CONCRETE WITH FIBER MESH. CONCRETE SHALL BE INSTALLED PER DETAILS AND SPECIFICATIONS.
5. CONTRACTOR IS RESPONSIBLE TO RESTORE ALL ITEMS IN RIGHT OF WAY TO EXISTING OR BETTER CONDITION AFTER CONSTRUCTION ACTIVITIES.
6. CONTRACTOR SHALL CONTACT EACH PROPERTY OWNER ALONG THE ROUTE OF NEW PIPING AND CONSTRUCTION AND LOCATE ANY EXISTING IRRIGATION/SPRINKLER SYSTEMS ON PRIVATE PROPERTY OR CITY R.O.W.'S DUE TO WORK BEING PERFORMED BY CONTRACTOR AND/OR SUB-CONTRACTORS.
7. CONTRACTOR SHALL BE RESPONSIBLE FOR STABILIZATION OF ALL DISTURBED AREAS WITHIN PROJECT LIMITS WITH SOD MATCHED TO EXISTING LAWN TYPE. CONTRACTOR RESPONSIBLE FOR WATERING SOD WITHIN 24 HOURS OF PLACING SOD AND AS NECESSARY FOR PERMANENT VEGETATION
8. CONTRACTOR IS RESPONSIBLE FOR PROVIDING ALL NECESSARY MAINTENANCE OF TRAFFIC (VEHICULAR AND PEDESTRIAN) IN ACCORDANCE WITH THE CITY OF JACKSONVILLE BEACH FOR CITY RIGHT-OF-WAYS AND FDOT FOR FDOT RIGHT-OF-WAYS.
9. CONTRACTOR IS RESPONSIBLE TO LOCATE, IDENTIFY, AND PLAN FOR ALL SEWER LATERAL CROSSINGS.
10. OPEN CUTTING DRIVEWAYS: WHEN OPEN CUTTING DRIVEWAYS, 1) NOTIFY USERS SEVEN (7) DAYS IN ADVANCE USING DOOR-HANGER TYPE NOTICES OR ON-SITE SIGNS AS APPROPRIATE AND APPROVED BY CITY. 2) MAINTAIN USER'S ACCESS TO THE PROPERTY. 3) RESTORE THE DRIVEWAYS TO AT LEAST AN EQUIVALENT CONDITION AND TYPES OF MATERIAL TO WHAT EXISTED PRIOR TO CUTTING.

STEVE DUCHARME LOCATION: R:\20-1009 JAX BCH SMALL WS\X\CDS\BURRITO GALLERY.DWG

REV NO	DATE	DRWN BY	CHKD BY	DESCRIPTION
1				
2				
3				
4				
5				
6				

Signature
Angela B. Bryan, P.E.
FL Professional Eng. #56730

Date

JACKSONVILLE BEACH WATER AND SEWER IMPROVEMENTS

SEWER IMPROVEMENTS FOR BURRITO GALLERY AND VERIZON BUILDINGS

CITY OF JACKSONVILLE BEACH
JACKSONVILLE BEACH, FLORIDA

DESIGN	DRAWN
ABB	SLD
JOB NUMBER	20-1009
ISSUE DATE	OCTOBER 2020
ISSUE	BID

FOUR WATERS ENGINEERING
324 6th AVE N. JACKSONVILLE BEACH, FLORIDA 32250
904-414-2400 C.O.A.# 31101 WWW.4WENG.COM

DRAWING NUMBER
C-4

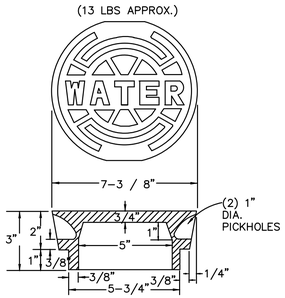

WATER SYSTEM VALVE BOX COVER

N.T.S.

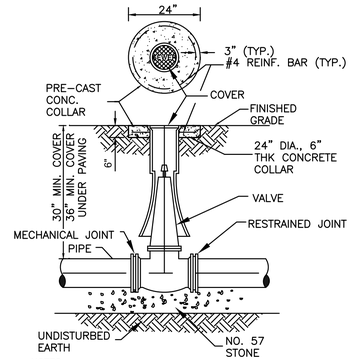

NOTES:
1. PRE-CAST CONCRETE COLLAR SHALL BE FLUSH WITH GRADE, AND SHALL BE INCLUDED AS PART OF THE COST OF EACH WATER VALVE.

VALVE BOX DETAIL

NOT TO SCALE

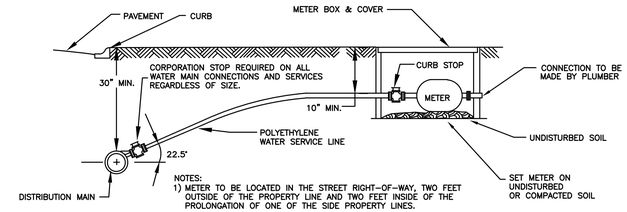

NOTES:
1) METER TO BE LOCATED IN THE STREET RIGHT-OF-WAY, TWO FEET OUTSIDE OF THE PROPERTY LINE AND TWO FEET INSIDE OF THE PROLONGATION OF ONE OF THE SIDE PROPERTY LINES.
2) LOCATING WIRING & WARNING TAPE REQUIRED ON SERVICES & WATER MAINS.
3) NO OPEN CUT UNDER ROADWAY PAVING ALLOWED UNLESS THE ROADWAY IS BEING RECONSTRUCTED OR IF DIRECTED OTHERWISE BY THE ENGINEER.

SERVICE METER INSTALLATION

NOT TO SCALE

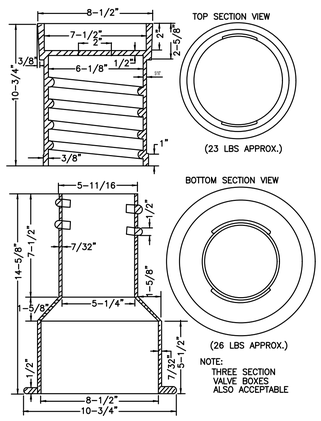

NOTE:
THREE SECTION VALVE BOXES ALSO ACCEPTABLE

WATER SYSTEM VALVE BOX

N.T.S.

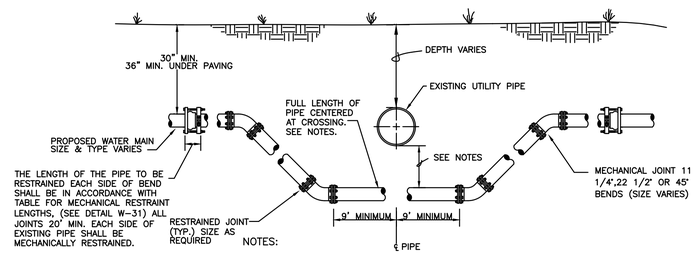

NOTES:
1. IF EXISTING UTILITY PIPE IS A WATER MAIN 6-INCHES OF SEPARATION IS REQUIRED.
2. IF EXISTING UTILITY PIPE IS A FORCE MAIN, SANITARY SEWER, RECLAIMED WATER MAIN OR STORM SEWER, 18 INCHES OF SEPARATION IS REQUIRED. IF THIS IS IMPRACTICAL AND EXISTING UTILITY MAIN IS C900, C905 OR D.I. PIPE, SEPARATION CAN BE REDUCED TO 6-INCHES. A FULL LENGTH OF PIPE SHALL BE CENTERED UNDER EXISTING UTILITY MAIN TO PROVIDE MAXIMUM JOINT SPACING FOR ALL CROSSINGS.
3. LOCATING WIRING REQUIRED. SEE SHT. 7.

ADJ. UNDER EXIST. UTILITIES

N.T.S.

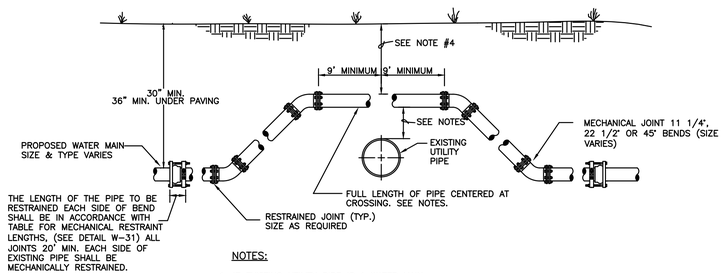

NOTES:
1. IF EXISTING UTILITY PIPE IS A WATER MAIN 6-INCHES OF SEPARATION IS REQUIRED.
2. IF EXISTING UTILITY PIPE IS A FORCE MAIN, SANITARY SEWER, RECLAIMED WATER MAIN OR STORM SEWER, 18 INCHES OF SEPARATION IS REQUIRED. IF THIS IS IMPRACTICAL AND EXISTING UTILITY MAIN IS C900, C905 OR D.I. PIPE, SEPARATION CAN BE REDUCED TO 6-INCHES. A FULL LENGTH OF PIPE SHALL BE CENTERED OVER EXISTING UTILITY MAIN TO PROVIDE MAXIMUM JOINT SPACING FOR ALL CROSSINGS.
3. LOCATING WIRING REQUIRED. SEE SHT. 7.
4. DEPTH OF BURY TO BE 36" MINIMUM IN PAVED AREAS MEASURED FROM FINISHED GRADE. DEPTH OF BURY TO BE 30" MINIMUM IN UNPAVED AREAS.

ADJ. OVER EXIST. UTILITIES

N.T.S.

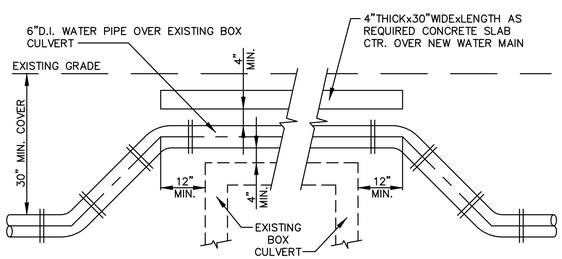

ALL FITTINGS USED IN THIS TRANSITION ARE TO BE D.I. MJ RESTRAINED.

CULVERT TRANSITION - DETAIL 1

N.T.S.

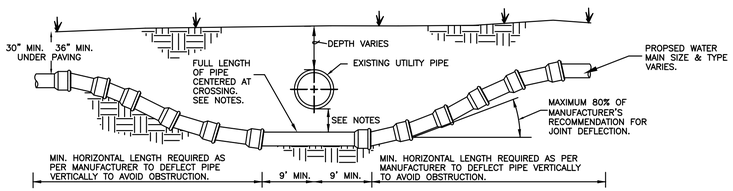

NOTES:
1. IF EXISTING UTILITY PIPE IS A WATER MAIN 6-INCHES OF SEPARATION IS REQUIRED.
2. IF EXISTING UTILITY PIPE IS A FORCE MAIN, SANITARY SEWER, RECLAIMED WATER MAIN OR STORM SEWER, 18 INCHES OF SEPARATION IS REQUIRED. IF THIS IS IMPRACTICAL AND EXISTING UTILITY MAIN IS C900, C905 OR D.I. PIPE, SEPARATION CAN BE REDUCED TO 6-INCHES. A FULL LENGTH OF PIPE SHALL BE CENTERED UNDER EXISTING UTILITY MAIN TO PROVIDE MAXIMUM JOINT SPACING FOR ALL CROSSINGS.
3. LOCATING WIRING REQUIRED. SEE SHT. 7.

ADJ. UNDER EXIST. UTILITIES (PIPE DEFLECTION)

N.T.S.

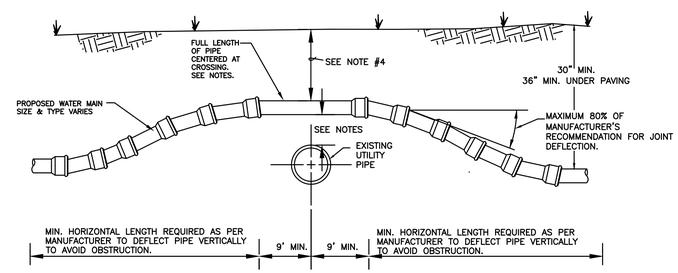

NOTES:
1. IF EXISTING UTILITY PIPE IS A WATER MAIN 6-INCHES OF SEPARATION IS REQUIRED.
2. IF EXISTING UTILITY PIPE IS A FORCE MAIN, SANITARY SEWER, RECLAIMED WATER MAIN OR STORM SEWER, 18 INCHES OF SEPARATION IS REQUIRED. IF THIS IS IMPRACTICAL AND EXISTING UTILITY MAIN IS C900, C905 OR D.I. PIPE, SEPARATION CAN BE REDUCED TO 6-INCHES. A FULL LENGTH OF PIPE SHALL BE CENTERED OVER EXISTING UTILITY MAIN TO PROVIDE MAXIMUM JOINT SPACING FOR ALL CROSSINGS.
3. LOCATING WIRING REQUIRED. SEE SHT. 7.
4. DEPTH OF BURY TO BE 36" MINIMUM IN PAVED AREAS MEASURED FROM FINISHED GRADE. DEPTH OF BURY TO BE 30" MINIMUM IN UNPAVED AREAS.

ADJ. OVER EXIST. UTILITIES (PIPE DEFLECTION)

N.T.S.

ANGELA B. BRYAN
LICENSE
No. 56730
STATE OF FLORIDA
PROFESSIONAL ENGINEER

REV NO	DATE	DRWN BY	CHKD BY	DESCRIPTION
1				
2				
3				
4				
5				
6				

Signature
Angela B. Bryan, P.E.
FL Professional Eng. #56730
Date

JACKSONVILLE BEACH WATER AND SEWER IMPROVEMENTS

CONSTRUCTION DETAILS

CITY OF JACKSONVILLE BEACH
JACKSONVILLE BEACH, FLORIDA

DESIGN	DRAWN
ABB	SLD
JOB NUMBER	20-1009
ISSUE DATE	OCTOBER 2020
ISSUE	BID

FOUR WATERS ENGINEERING
324 6th AVE N. JACKSONVILLE BEACH, FLORIDA 32250
904-414-2400 C.O.A.# 31101 WWW.4WENG.COM

DRAWING NUMBER
D-1

STEVE BUCHANAN LOCATION R:\20-1009 JAX BCH SMALL WS\XX\DTS\COVER AND DETAILS.DWG

MINIMUM LENGTH TO BE RESTRAINED ON EACH SIDE OF FITTING (FEET)									
NOMINAL PIPE SIZE (INCHES)	11 1/4° Horizontal Elbow	22 1/2° Horizontal Elbow	45° Horizontal Elbow	90° Horizontal Elbow	Horizontal Tees	Horizontal Plugs and Valves	45° Vertical Offset Upper length/low per length	22½° Vertical Offset Upper length/lower length	Reducer (to 1 size smaller) Length on Larger Size Side
4	2	4	8	20	20 –run 1 –branch	50	20/3	8 / 1	n/a
6	2	5	10	28	20 –run 1 –branch	70	28/4	11 / 2	28
8	3	6	14	36	20 –run 1 –branch	90	36/5	14 / 3	30
10	4	8	18	40	20 –run 1 –branch	110	45/6	17 / 3	29
12	4	9	20	50	20 –run 1 –branch	120	52/8	20 / 4	50
14	5	10	23	56	20 –run 10 – branch	140	60/9	23 / 4	30
16	6	11	26	60	20 –run 26 – branch	160	67/10	26 / 5	30
18	6	12	29	69	20 –run 41 – branch	180	74/12	29 / 5	29
20	7	13	32	75	20 –run 55 – branch	195	80/13	36 / 6	29
24	7	15	33	76	20 –run 58 – branch	200	81/14	37 / 7	55
30	9	18	36	88	20 –run 77 – branch	235	97/16	44 / 8	77
36	10	20	40	100	20 –run 115 – branch	270	110/20	51 / 10	77

NOTES
1. TABLE ASSUMPTIONS: PVC PIPE, SAFETY FACTOR = 1.5, TEST PRESSURE = 150PSI SOIL = GM OR SM, 3 FT. BURY DEPTH TO TOP OF PIPE, TRENCH TYPE 3, BRANCH ON TEE IS ONE SIZE SMALLER THAN RUN OF TEE SIZE AND 20 FEET OF PIPE IS INSTALLED PAST THE TEE ON THE RUN SIDE (SMALLER BRANCH SIZES MUST BE CALCULATED BY THE ENGINEER). VERTICAL OFFSETS ARE 3 FEET DEEP ON TOP AND 8 FEET DEEP ON BOTTOM. REDUCERS ARE CALCULATED FOR ONE SIZE REDUCTION. OTHER CONDITIONS WILL REQUIRE ADDITIONAL CALCULATIONS.
2. ALL FITTINGS MUST BE RESTRAINED. ONE OF THE FOLLOWING METHODS MAY BE USED:
   A. MECHANICAL RESTRAINTS AT FITTING AND AT ADJACENT JOINTS TO A LENGTH AS SPECIFIED IN CHART.
   B. TIE RODS AT FITTING AND THROUGH JOINTS TO A LENGTH AS SPECIFIED IN CHART IF APPROVED BY CITY OF JACKSONVILLE BEACH
3. PAYMENT FOR RESTRAINTS AT FITTING SHALL BE INCLUDED WITH THE FITTING PAYMENT. PAYMENT FOR RESTRAINT AT DISTANCE "L" FROM FITTING SHALL BE AS IF 20 FT. JOINTS WERE INSTALLED.
4. VALVE RESTRAINTS SHALL BE RESTRAINED THE SAME DISTANCE AS HORIZONTAL PLUGS.

MECHANICAL RESTRAINT TABLE
NOT TO SCALE

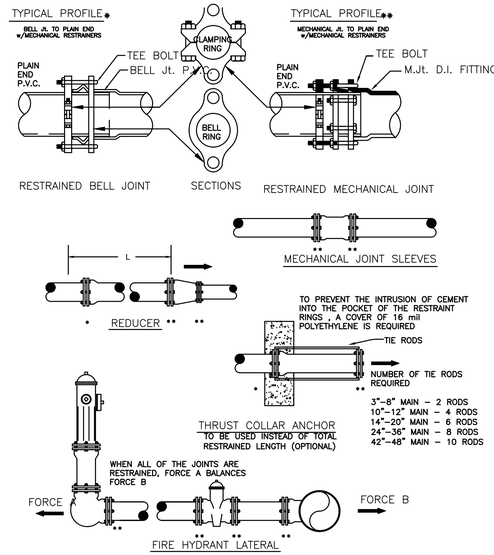

MECHANICAL RESTRAINT DETAILS
NOT TO SCALE

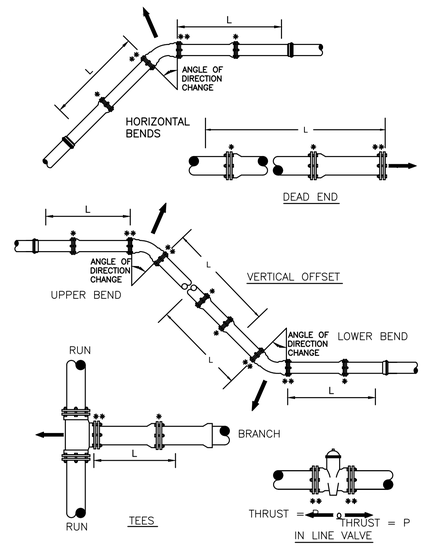

MECHANICAL RESTRAINT DETAILS
NOT TO SCALE

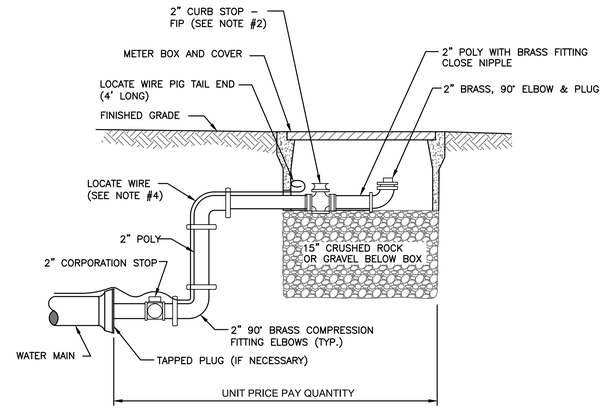

NOTES:
1. PIPE SHALL BE POLYETHYLENE. FITTINGS SHALL BE BRASS.
2. THE 2" CURB STOP SHALL BE ALL BRONZE. FITTINGS SHALL BE BRASS.
3. ANY RECLAIMED WATER VALVE SHALL HAVE RECLAIMED EMBLEM.
4. LOCATE WIRE FOR 10' OR GREATER IN LENGTH.
5. CANNOT BE PLACED UNDER CONCRETE OR PAVEMENT.
6. PLACE 2 FEET PAST LAST WATER MAIN SERVICE CONNECTION.

FLUSHING VALVE BELOW GRADE
NOT TO SCALE

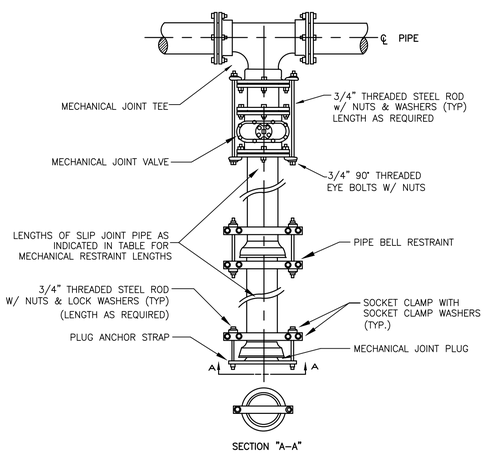

NOTES:
1. IN A STRAIGHT RUN DEAD END INSTALLATION THE VALVE SHALL BE RESTRAINED TO THE NEXT UPSTREAM PIPE JOINTS AS OUTLINED IN TABLE FOR MECHANICAL RESTRAINT LENGTHS
2. LOCATING WIRING REQUIRED.
3. ALL PIPE & FITTINGS SHOWN VARY IN SIZE
4. CONCRETE COLLARS WITH TIE–RODS MAY BE USED INSTEAD OF LENGTH OUTLINED IN TABLE FOR MECHANICAL RESTRAINT LENGTHS. SEE THIS SHEET

PLUGGED DEAD END
NOT TO SCALE

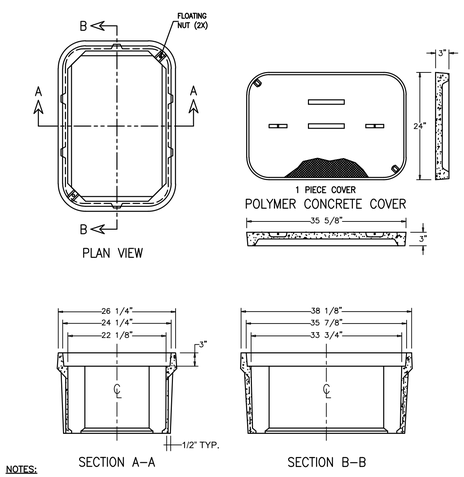

NOTES:
1. THE DIMENSIONS SHOWN ARE FOR A STANDARD 24" WIDE BY 36" LONG BY 24" DEEP BOX. ALL DIMENSIONS ARE SHOWN IN INCHES.
2. GRADE TO SLOPE AWAY FROM METER BOX.
3. DO NOT INSTALL METER BOX IN AREA SUBJECTED TO FLOODING.
4. LOCATING WIRING REQUIRED.
5. A 4" THICK CONCRETE BOTTOM SHALL BE CONSTRUCTED DURING THE BOX INSTALLATION.

24" x 36" x 24" CO-POLYMER WATER METER BOX
NOT TO SCALE

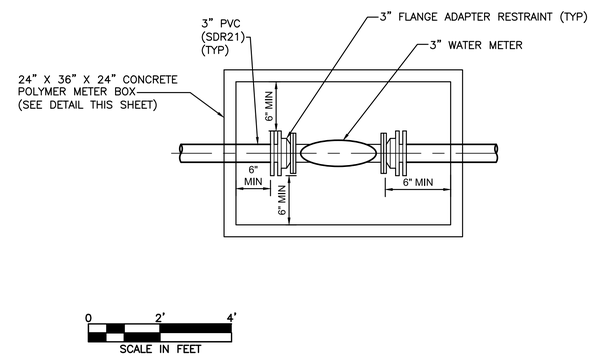

NOTES:
1. THE CITY OF JACKSONVILLE BEACH WILL PROVIDE THE 3" WATER METER.
2. FOR COPOLYMER WATER METER BOX DETAIL, SEE DETAIL THIS SHEET.
3. MAXIMUM COVER OF LARGE WATER METERS SHALL BE 36" (FROM TOP OF PIPE TO GRADE).
4. LOCATING WIRING REQUIRED FROM WATER MAIN TO METER BOX.

WATER METER BOX DETAIL
AS SHOWN

ANGELA B. BRYAN LICENSE No. 56730 STATE OF FLORIDA PROFESSIONAL ENGINEER

REV NO	DATE	DRWN BY	CHKD BY	DESCRIPTION
1				
2				
3				
4				
5				
6				

Signature
Angela B. Bryan, P.E.
FL Professional Eng. #56730
Date

JACKSONVILLE BEACH WATER AND SEWER IMPROVEMENTS

CONSTRUCTION DETAILS

CITY OF JACKSONVILLE BEACH
JACKSONVILLE BEACH, FLORIDA

DESIGN	DRAWN	
ABB	SLD	
JOB NUMBER	20-1009	
ISSUE DATE	OCTOBER 2020	
ISSUE	BID	

FOUR WATERS ENGINEERING
324 6th AVE N. JACKSONVILLE BEACH, FLORIDA 32250
904-414-2400 C.O.A.# 31101 WWW.4WENG.COM

DRAWING NUMBER
D-2

STEVE BUCHANAN LOCATION R:\20-1009 JAX BCH SMALL WS\X\DES\COVER AND DETAILS.DWG

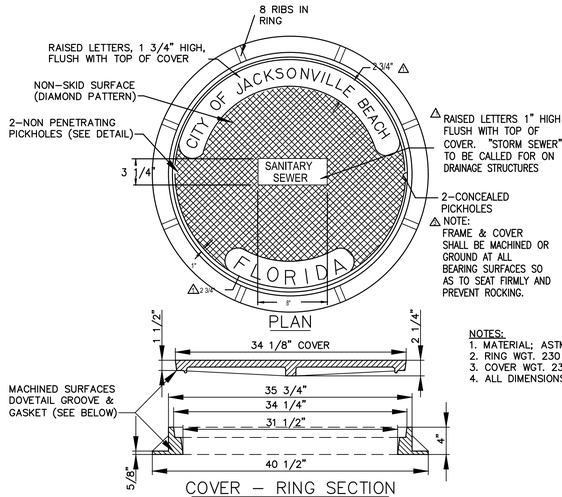

SEWER MANHOLE COVER AND FRAME

N.T.S.

NOTES:
1. MATERIAL; ASTM-A48 CLASS 35B, GRAY IRON
2. RING WGT. 230 LBS. APPROX.
3. COVER WGT. 230 LBS. APPROX.
4. ALL DIMENSIONS ARE SHOWN IN INCHES.

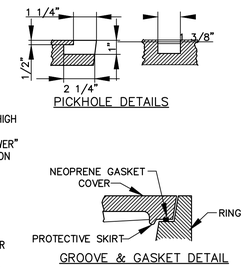

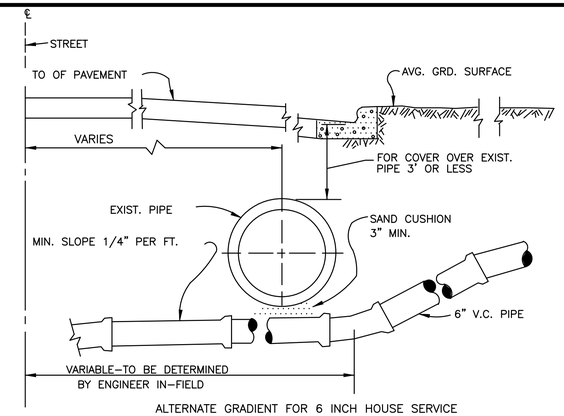

ALTERNATE GRADIENT FOR 6 INCH HOUSE SERVICE SEWERS AT CONFLICTS WITH EXISTING STORM SEWERS & OTHER EXISTING CONDUITS.

6 INCH HOUSE CONN.

N.T.S.

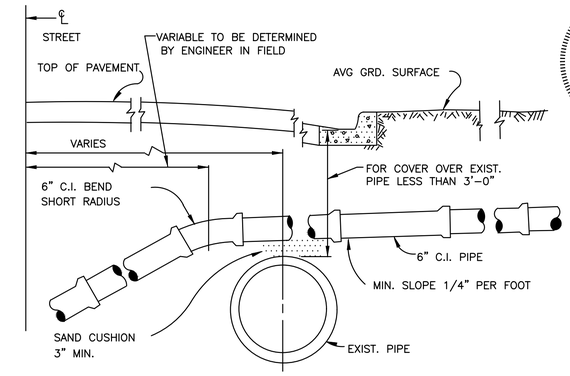

ALTERNATE GRADIENT FOR 6 INCH HOUSE SERVICE SEWERS AT CONFLICTS WITH EXISTING STORM SEWERS & OTHER EXISTING CONDUITS

6 INCH C.I. HOUSE CONN.

N.T.S.

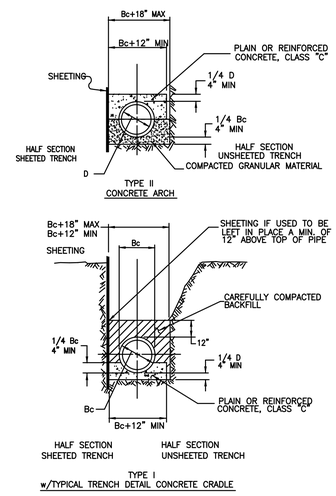

BEDDING - CLASS A

N.T.S.

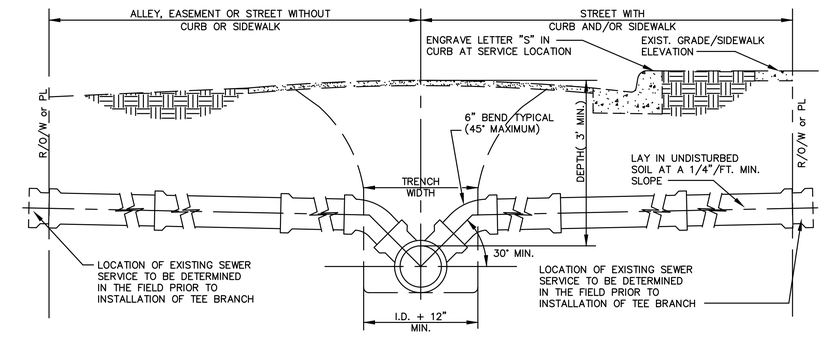

SEWER SERVICE LATERAL SECTION

N.T.S.

NOTES:
1. ALL NEW SEWER SERVICE LATERALS SHALL HAVE A 4" X 4" X 3' LONG PRESSURE TREATED WOOD POST INSTALLED BETWEEN THE END OF THE LATERAL AND THE PROPERTY LINE. THE POST SHALL BE PAINTED "RED" AND EXTEND 12" ABOVE THE FINISHED GRADE. THIS WORK SHALL BE INCLUDED IN THE UNIT PRICE FOR THE INDIVIDUAL ITEMS.

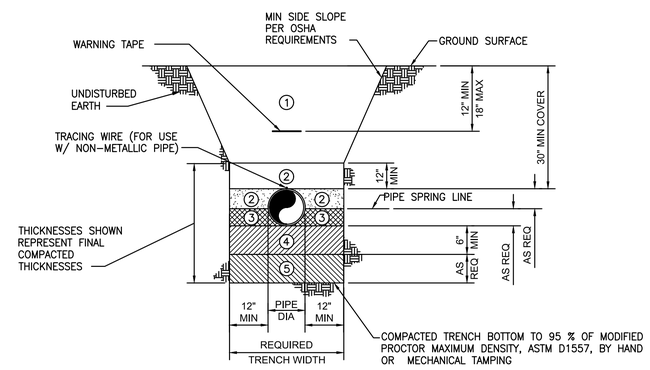

FINAL BACKFILL – CLEAN, WELL GRADED MATERIAL IN ACCORDANCE WITH THE REQUIREMENTS OF THE CONTRACT SPECIFICATIONS. FINAL BACKFILL SHALL BE INSTALLED IN LIFTS NOT EXCEEDING 6 INCHES, LOOSE MEASUREMENT, AND SHALL BE COMPACTED TO AT LEAST 95% MODIFIED PROCTOR MAXIMUM DRY DENSITY, ASTM D-1557. (98% DENSITY UNDER ROADWAYS AND STRUCTURES).

INITIAL BACKFILL – CLEAN, WELL GRADED MATERIAL IN ACCORDANCE WITH THE REQUIREMENTS OF THE CONTRACT SPECIFICATIONS. BACKFILL SHALL BE INSTALLED IN LIFTS NOT EXCEEDING 6 INCHES, LOOSE MEASUREMENT, AND SHALL BE COMPACTED TO AT LEAST 95% MODIFIED PROCTOR MAXIMUM DRY DENSITY, ASTM D-1557. (98% DENSITY UNDER ROADWAYS AND STRUCTURES) BACKFILL SHALL EXTEND TO THE TOP OF THE PIPE AFTER COMPACTION. ALL LIFTS SHALL BE COMPACTED BY HAND TAMPING OR AN APPROVED METHOD OF MECHANICAL TAMPING.

HAUNCHING – CLEAN, WELL GRADED MATERIAL IN ACCORDANCE WITH THE REQUIREMENTS OF THE CONTRACT SPECIFICATIONS. HAUNCHING SHALL BE INSTALLED IN COMPLETELY DEWATERED TRENCHES IN LIFTS NOT EXCEEDING 4 INCHES, LOOSE MEASUREMENT, AND SHALL BE COMPACTED TO AT LEAST 95% MODIFIED PROCTOR MAXIMUM DRY DENSITY, ASTM D-1557, (98% DENSITY UNDER ROADWAYS AND STRUCTURES) BY HAND TAMPING. HAUNCHING SHALL BE BROUGHT UP EQUALLY ON BOTH SIDES OF THE PIPE.

4 BEDDING – CLEAN, CLASS B TYPE 1, WELL GRADED MATERIAL IN ACCORDANCE WITH THE REQUIREMENTS OF THE CONTRACT SPECIFICATIONS. BEDDING SHALL BE INSTALLED IN COMPLETELY DEWATERED TRENCHES IN LIFTS NOT EXCEEDING 6 INCHES, LOOSE MEASUREMENT, AND SHALL BE COMPACTED TO AT LEAST 95% MODIFIED PROCTOR MAXIMUM DRY DENSITY, ASTM D-1557, (98% DENSITY UNDER ROADWAYS AND STRUCTURES) BY HAND OR MECHANICAL TAMPING. PROPERLY SHAPED BELL HOLES SHALL BE EXCAVATED IN THE COMPACTED BEDDING TO PERMIT ASSEMBLY OF THE PIPE.

NOTE: NATIVE, UNDISTURBED MATERIAL IN COMPLETELY DEWATERED TRENCHES MEETING THE COMPACTION AND MATERIAL REQUIREMENTS FOR COMPACTED BEDDING MATERIAL NEED NOT BE REPLACED OR REWORKED, EXCEPT FOR SHAPING OF BELL HOLES, AND WHERE REFILL IS REQUIRED.

5 REFILL – REQUIRED WHERE TRENCH HAS BEEN OVER-EXCAVATED. REFILL SHALL BE INSTALLED IN COMPLETELY DEWATERED TRENCHES IN LIFTS NOT EXCEEDING 6 INCHES AND COMPACTED TO 95% OF ASTM D1557 MAX DRY DENSITY, (98% DENSITY UNDER ROADWAYS AND STRUCTURES) BY HAND OR MECHANICAL TAMPING.

TYPICAL PIPE TRENCH DETAIL

NOT TO SCALE

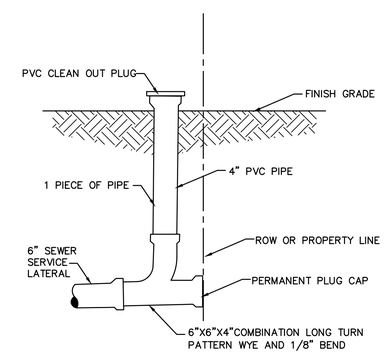

SEWER SERVICE LATERAL CLEANOUT ASSEMBLY

N.T.S.

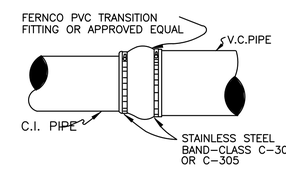

TYPICAL C.I. TO V.C. COUPLING ADAPTER

N.T.S.

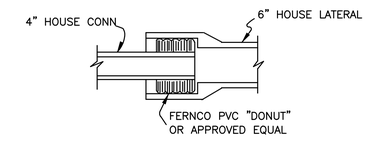

TYPICAL 6" TO 4" HOUSE CONN.

N.T.S.

ANGELA B. BRYAN LICENSE No. 56730 STATE OF FLORIDA PROFESSIONAL ENGINEER

REV NO	DATE	DRWN BY	CHKD BY	DESCRIPTION
1				
2				
3				
4				
5				
6				

Signature
Angela B. Bryan, P.E.
FL Professional Eng. #56730
Date

JACKSONVILLE BEACH WATER AND SEWER IMPROVEMENTS

CONSTRUCTION DETAILS

CITY OF JACKSONVILLE BEACH
JACKSONVILLE BEACH, FLORIDA

DESIGN	DRAWN	
ABB	SLD	
JOB NUMBER	20-1009	
ISSUE DATE	OCTOBER 2020	
ISSUE	BID	

FOUR WATERS ENGINEERING
324 6th AVE N. JACKSONVILLE BEACH, FLORIDA 32250
904-414-2400 C.O.A.# 31101 WWW.4WENG.COM

DRAWING NUMBER
D-3

STEVE DUCHARME LOCATION: R:\20-1009 JAX BCH SMALL WS\X\CDS\COVER AND DETAILS.DWG

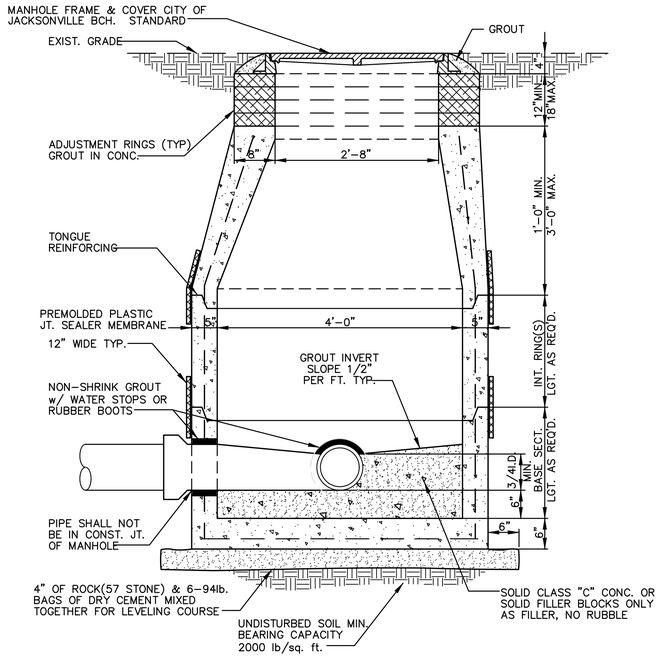

NOTES:
1. PRECAST MANHOLE SECTIONS TO BE MANUFACTURED IN ACCORDANCE WITH LATEST EDITION OF ASTM C47B WITH 4000 LB. CONCRETE, TYPE II CEMENT.
2. THE EXTERIOR OF THE MANHOLE SHALL BE GIVEN TWO COATS OF BITUMINOUS WATERPROOFING MATERIAL. DO NOT COAT JOINT OR PIPE OPENING SURFACES.
3. THE INTERIOR OF THE MANHOLE SHALL BE COATED WITH "SPECTRASHIELD".

SANITARY SEWER TYPE "A" MANHOLE

N.T.S.

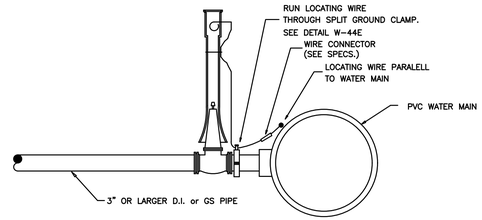

CONNECTION TO PVC MAINS
w/3" OR LARGER D.I. OR GS WATER SERVICE OR WATER MAIN

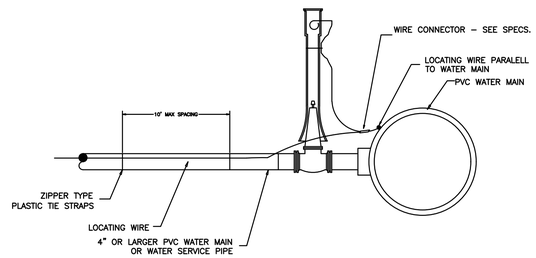

CONNECTION TO PVC MAINS
4" OR LARGER PVC WATER MAIN OR WATER SERVICE PIPE

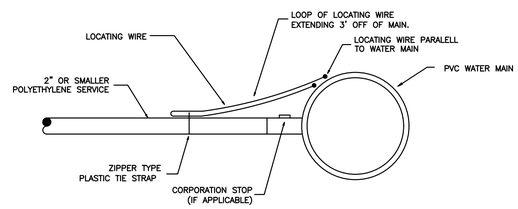

CONNECTION TO PVC MAINS
2" OR SMALLER POLYETHYLENE WATER SERVICE

LOCATING WIRE DETAIL "A"

N.T.S.

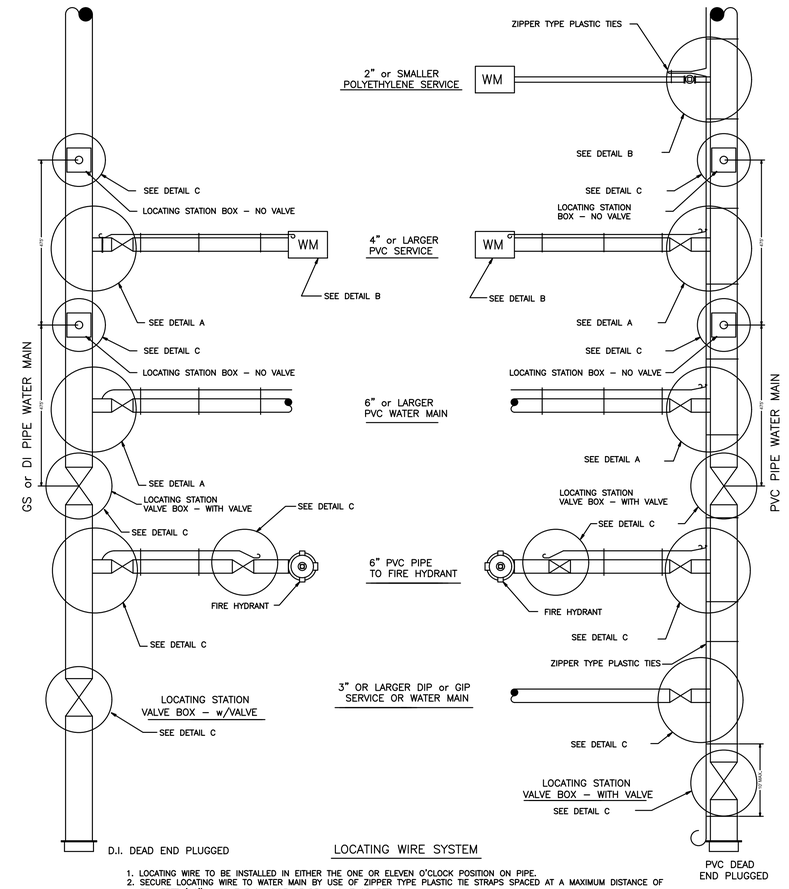

LOCATING WIRE SYSTEM

1. LOCATING WIRE TO BE INSTALLED IN EITHER THE ONE OR ELEVEN O'CLOCK POSITION ON PIPE.
2. SECURE LOCATING WIRE TO WATER MAIN BY USE OF ZIPPER TYPE PLASTIC TIE STRAPS SPACED AT A MAXIMUM DISTANCE OF TEN FEET (10') AND AT EACH SIDE OF BELL JOINT OR FITTING.
3. THE ENTIRE LOCATING SYSTEM SYSTEM SHALL BE SUBJECTED TO TESTING TO DETERMINE ITS RELIABILITY. WHERE INSTALLED UNDER PAVEMENT AREAS , TESTING SHALL BE DONE PRIOR TO THE PLACEMENT OF PAVEMENT.
4. LOCATING WIRE SHALL TERMINATE WITHIN A VALVE BOX WITH A VALVE OR A METER BOX IF NO VALVE AT 475' INTERVALS. SEE DETAILS.
5. LOCATING WIRE SHALL BE 10 GAUGE, SINGLE STRAND, UF RATED (DIRECT BURIAL), COPPER WIRE.

LOCATING WIRE

N.T.S.

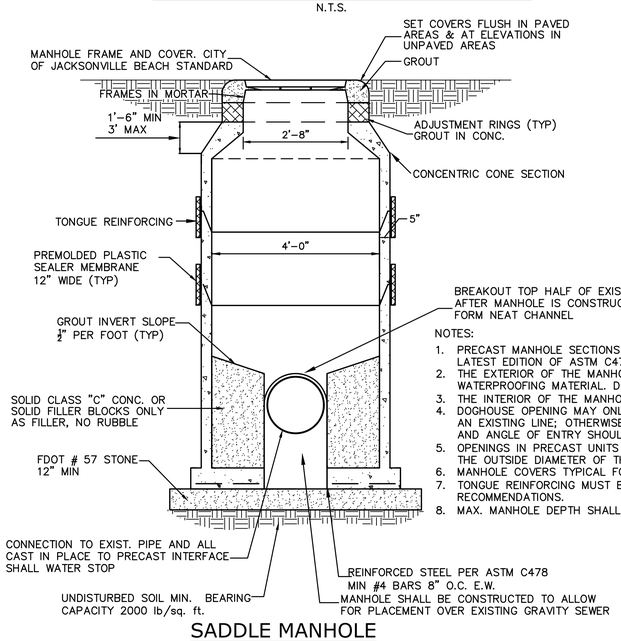

NOTES:
1. PRECAST MANHOLE SECTIONS TO BE MANUFACTURED IN ACCORDANCE WITH LATEST EDITION OF ASTM C47B WITH 4000 LB. CONCRETE, TYPE II CEMENT.
2. THE EXTERIOR OF THE MANHOLE SHALL BE GIVEN TWO COATS OF BITUMINOUS WATERPROOFING MATERIAL. DO NOT COAT JOINT OR PIPE OPENING SURFACES.
3. THE INTERIOR OF THE MANHOLE SHALL BE COATED WITH "SPECTRASHIELD".
4. DOGHOUSE OPENING MAY ONLY BE USED WHEN PLACING A NEW MANHOLE OVER AN EXISTING LINE; OTHERWISE, THE OPENING MUST BE CAST. SIZE, LOCATION AND ANGLE OF ENTRY SHOULD BE AS REQUIRED BY THE PLANS.
5. OPENINGS IN PRECAST UNITS ARE TO BE 4" MINIMUM TO 8" MAX. LARGER THAN THE OUTSIDE DIAMETER OF THE PROPOSED PIPE.
6. MANHOLE COVERS TYPICAL FOR ALL FRAME TYPES.
7. TONGUE REINFORCING MUST BE USED IN ACCORDANCE WITH MANUFACTURER'S RECOMMENDATIONS.
8. MAX. MANHOLE DEPTH SHALL BE 15' TO LOWEST PIPE INVERT.

SADDLE MANHOLE

N.T.S.

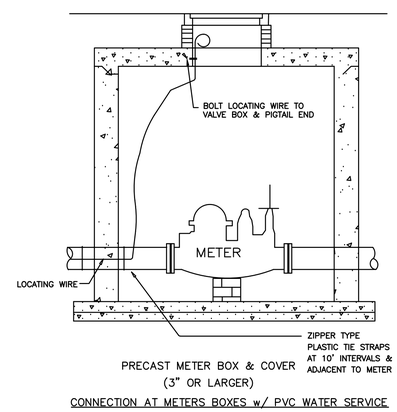

CONNECTION AT METERS BOXES w/ PVC WATER SERVICE

LOCATING WIRE DETAIL "B"

N.T.S.

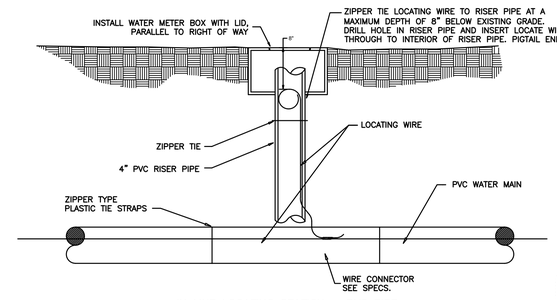

IN LINE LOCATING STATION - PVC PIPE METER BOX

LOCATING WIRE DETAIL "C"

N.T.S.

ANGELA B. BRYAN LICENSE No. 56730 STATE OF FLORIDA PROFESSIONAL ENGINEER

Signature	Date
Angela B. Bryan, P.E. FL Professional Eng. #56730	

REV NO	DATE	DRWN BY	CHKD BY	DESCRIPTION
1				
2				
3				
4				
5				
6				

JACKSONVILLE BEACH WATER AND SEWER IMPROVEMENTS

CONSTRUCTION DETAILS

CITY OF JACKSONVILLE BEACH
JACKSONVILLE BEACH, FLORIDA

DESIGN	DRAWN	
ABB	SLD	
JOB NUMBER	20-1009	
ISSUE DATE	OCTOBER 2020	
ISSUE	BID	

FOUR WATERS ENGINEERING
324 6th AVE N. JACKSONVILLE BEACH, FLORIDA 32250
904-414-2400 C.O.A.# 31101 WWW.4WENG.COM

DRAWING NUMBER
D-4

STEVE DUCHARME LOCATION R:\20-1009 JAX BCH SMALL WS\X\DBS\COVER AND DETAILS.DWG

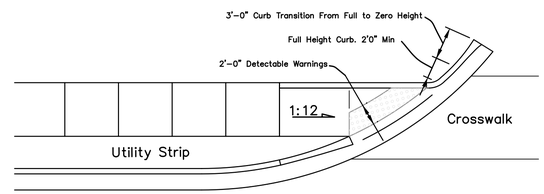

LINEAR SIDEWALK RAMPS

PLACEMENT OF SIDEWALK CURB RAMPS AT CURBED RETURNS (TYP)

NOTES:

1. DETAIL FROM FDOT STANDARD PLANS (FY 2020-21): SHEET 7 OF INDEX 522-002 "DETECTABLE WARNINGS AND SIDEWALK CURB RAMPS"
2. WHERE CROSSWALK MARKINGS ARE USED, RAMPS MUST FALL WITHIN THE CROSSWALK LIMITS, A CLEAR SPACE OF 48" MINIMUM IS REQUIRED AT THE BOTTOM OF THE RAMP WITHIN A MARKED CROSSWALK. IF CROSSWALK MARKINGS ARE NOT PRESENT, A CLEAR SPACE OF 48" MINIMUM IS REQUIRED AT THE BOTTOM OF THE RAMP OUTSIDE TRAVEL LANES.
3. CROSSWALK WIDTHS AND CONFIGURATIONS VARY; MUST CONFORM TO INDEX 711-001.

ANGELA B. BRYAN
LICENSE
No. 56730
STATE OF
FLORIDA
PROFESSIONAL ENGINEER

GENERAL NOTES:

1. CROSS SLOPES AND GRADES:
   A. SIDEWALK, RAMP, AND LANDING SLOPES (I.E. 0.02, 0.05, AND 1:12) SHOWN IN THIS INDEX ARE MAXIMUMS. WITH APPROVAL OF THE ENGINEER, PROVIDE THE MINIMUM FEASIBLE SLOPE WHERE THE REQUIREMENTS CANNOT BE MET.

   B. LANDINGS MUST HAVE CROSS-SLOPES LESS THAN OR EQUAL TO 0.02 IN ANY DIRECTION.

   C. MAINTAIN A SINGLE LONGITUDINAL SLOPE ALONG EACH SIDE OF THE CURB RAMP. RAMP SLOPES ARE NOT REQUIRED TO EXCEED 15 FEET IN LENGTH.

   D. JOINTS PERMITTED AT THE LOCATION OF SLOPE BREAKS. OTHERWISE LOCATE JOINTS IN ACCORDANCE WITH INDEX 522-001. NO JOINTS ARE PERMITTED WITHIN THE RAMP PORTION OF THE CURB RAMP.

2. CURB, CURB AND GUTTER AND/OR SIDEWALK:
   A. REFER TO INDEX 522-001 FOR CONCRETE THICKNESS AND SIDEWALK DETAILS.

   B. REMOVE ANY EXISTING CURB, CURB AND GUTTER, OR SIDEWALK TO THE NEAREST JOINT BEYOND THE CURB TRANSITION OR TO THE EXTENT THAT NO REMAINING SECTION IS LESS THAN 5 FEET LONG.

3. CURB RAMP ALPHA-IDENTIFICATION:
   A. SIDEWALK CURB RAMP ALPHA-IDENTIFICATIONS (E.G. CR-A) ARE PROVIDED FOR REFERENCE PURPOSES IN THE PLANS.

   B. ALPHA-IDENTIFICATIONS CR-I AND CR-J ARE INTENTIONALLY OMITTED.

4. DETECTABLE WARNINGS:
   A. INSTALL DETECTABLE WARNINGS IN ACCORDANCE WITH SPECIFICATION 527.

   B. PLACE DETECTABLE WARNINGS ACROSS THE FULL WIDTH OF THE RAMP OR LANDING, TO A MINIMUM DEPTH OF 2 FEET MEASURED PERPENDICULAR TO THE CURB LINE AND NO GREATER THAN 5 FEET FROM THE BACK OF THE CURB OR EDGE OF PAVEMENT.

   C. IF DETECTABLE WARNINGS ARE SHOWN IN THE PLANS ON SLOPES GREATER THAN 5%, ALIGN THE TRUNCATED DOMES WITH THE CENTERLINE OF THE RAMP; OTHERWISE, THE TRUNCATED DOMES ARE NOT REQUIRED TO BE ALIGNED.

5. DETECTABLE WARNINGS - ACCEPTANCE CRITERIA:
   A. COLOR AND TEXTURE SHALL BE COMPLETE AND UNIFORM.

   B. 90% OF INDIVIDUAL TRUNCATED DOMES SHALL BE IN ACCORDANCE WITH THE AMERICANS WITH DISABILITIES ACT STANDARDS FOR TRANSPORTATION FACILITIES, SECTION 705.

   C. THERE SHALL BE NO MORE THAN 4 NON-COMPLIANT DOMES IN ANY ONE SQUARE FOOT.

   D. NON-COMPLIANT DOMES SHALL NOT BE ADJACENT TO OTHER NON-COMPLIANT DOMES.

   E. SURFACES SHALL NOT DEVIATE MORE THAN 0.10" FROM A TRUE PLANE.

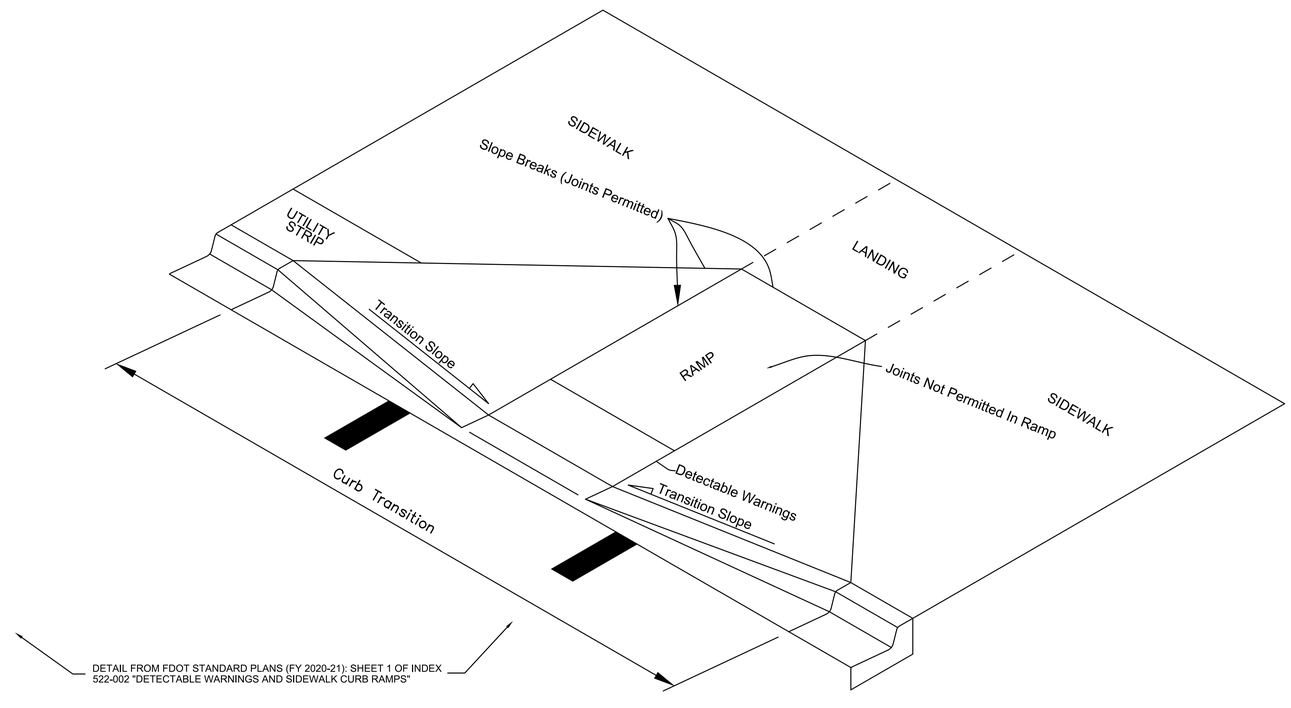

DETAIL FROM FDOT STANDARD PLANS (FY 2020-21): SHEET 1 OF INDEX 522-002 "DETECTABLE WARNINGS AND SIDEWALK CURB RAMPS"

CURB RAMP NOMENCLATURE

REV NO	DATE	DRWN BY	CHKD BY	DESCRIPTION
1				
2				
3				
4				
5				
6				

Signature
Angela B. Bryan, P.E.
FL Professional Eng. #56730

Date

JACKSONVILLE BEACH WATER AND SEWER IMPROVEMENTS

CONSTRUCTION DETAILS

CITY OF JACKSONVILLE BEACH
JACKSONVILLE BEACH, FLORIDA

DESIGN	DRAWN
ABB	SLD
JOB NUMBER	20-1009
ISSUE DATE	OCTOBER 2020
ISSUE	BID

FOUR WATERS ENGINEERING
324 6th AVE N. JACKSONVILLE BEACH, FLORIDA 32250
904-414-2400 C.O.A.# 31101 WWW.4WENG.COM

DRAWING NUMBER
D-5

STEVE BUCHANAN LOCATION R:\20-1009 JAX BCH SMALL WS\X\DDS\COVER AND DETAILS.DWG

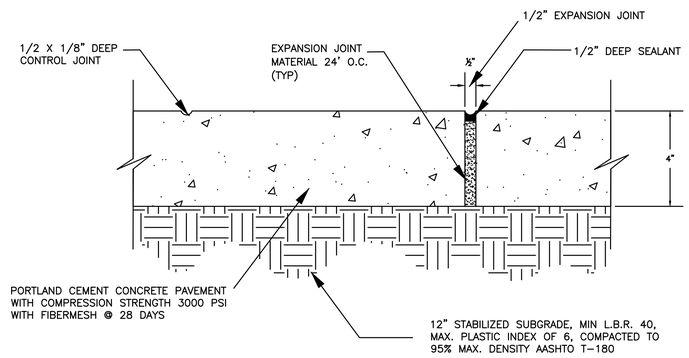

NOTE: IF CONTROL JOINTS ARE SAWED, SAWING SHALL BE ACCOMPLISHED WITHIN 12 HRS. OF CONCRETE POUR: 5'-0" O.C. (TYP)

STANDARD SIDEWALK DETAIL

N.T.S.

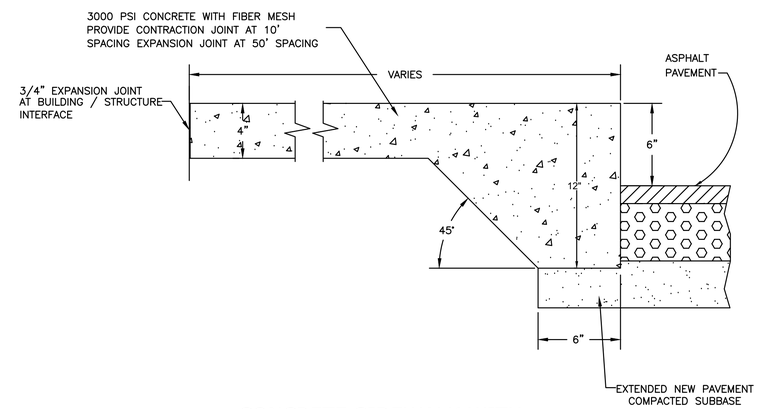

CONCRETE SIDEWALK WITH INTEGRAL CURB DETAIL

N.T.S.

ANGELA B. BRYAN
LICENSE
No. 56730
STATE OF FLORIDA
PROFESSIONAL ENGINEER

Signature
Angela B. Bryan, P.E.
FL Professional Eng. #56730

Date

REV NO	DATE	DRWN BY	CHKD BY	DESCRIPTION
1				
2				
3				
4				
5				
6				

JACKSONVILLE BEACH WATER AND SEWER IMPROVEMENTS

CONSTRUCTION DETAILS

CITY OF JACKSONVILLE BEACH
JACKSONVILLE BEACH, FLORIDA

DESIGN	DRAWN
ABB	SLD
JOB NUMBER	20-1009
ISSUE DATE	OCTOBER 2020
ISSUE	BID

FOUR WATERS ENGINEERING
324 8th AVE N. JACKSONVILLE BEACH, FLORIDA 32250
904-414-2400 C.O.A.#31101 WWW.4WENG.COM

DRAWING NUMBER
D-6

STEVE DUCHARME LOCATION R:\20-1009 JAX BCH SMALL WS\X\CDS\COVER AND DETAILS.DWG

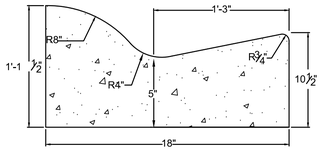

MIAMI TYPE CURB & GUTTER

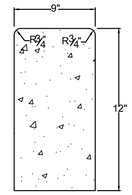

HEADER CURB

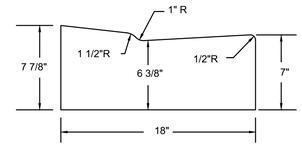

DROP CURB

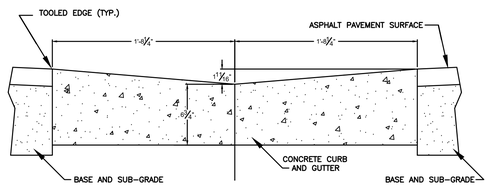

36" CONCRETE VALLEY GUTTER

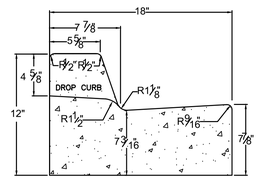

CITY STANDARD CURB AND GUTTER

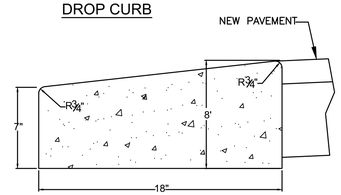

RIBBON CURB

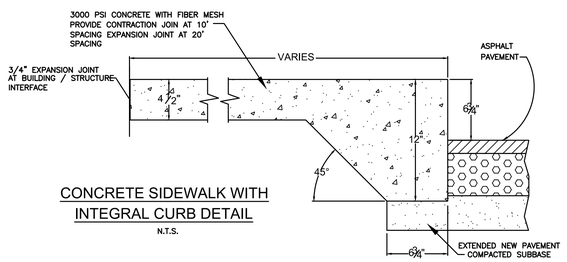

CONCRETE SIDEWALK WITH
INTEGRAL CURB DETAIL

N.T.S.

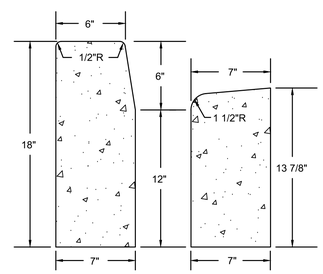

HEADER & DROP CURB

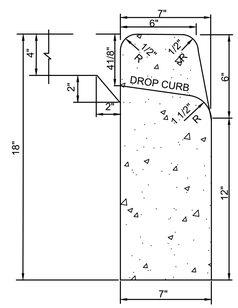

HEADER OR MONOLITHIC
CURB & SIDEWALK

CONCRETE QUANTITES

CITY STANDARD CURB	.0388889	CU. YD./LIN. FT.
STANDARD DROP CURB	.0322222	CU. YD./LIN. FT.
MEDIAN CURB	.0411111	CU. YD./LIN. FT.
MIAMI CURB	.0325926	CU. YD./LIN. FT.
HEADER CURB	.0314815	CU. YD./LIN. FT.
HEADER DROP CURB	.0244444	CU. YD./LIN. FT.

ALL CONCRETE FOR CURBING SHALL BE 3000 PSI
WITH COMMERCIAL GRADE FIBERMESH

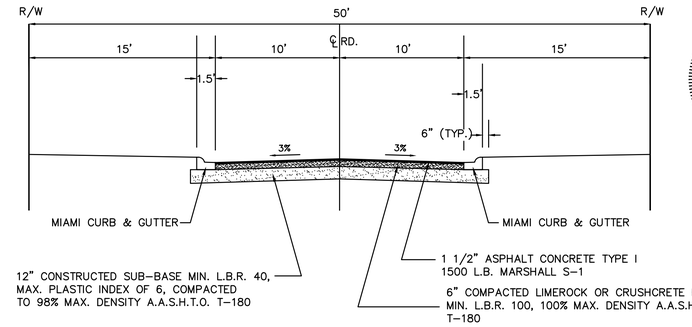

TYPICAL SECTION (MIAMI CURB)

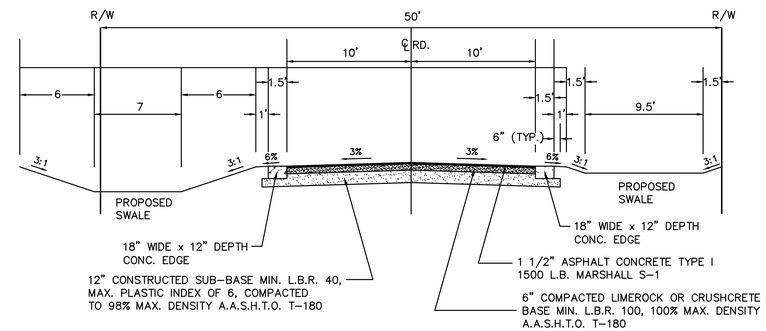

TYPICAL SECTION (RIBBON CURB)

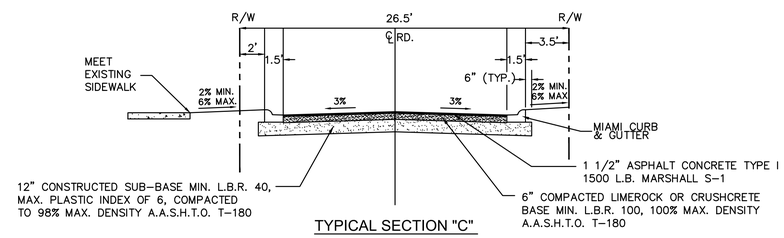

TYPICAL SECTION "C"

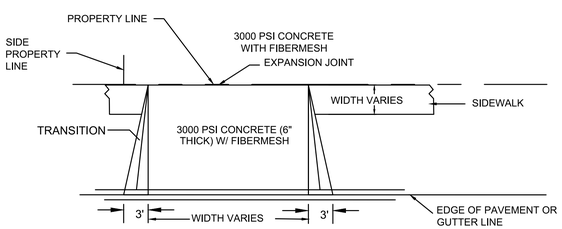

CITY OF JACKSONVILLE BEACH, FLORIDA
6" CONCRETE DRIVEWAY STANDARD DETAIL

NOT TO SCALE

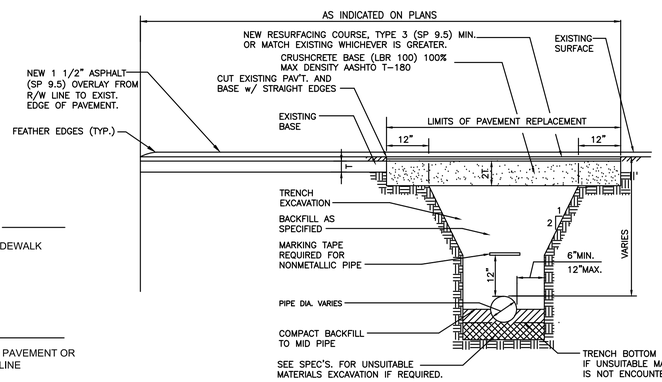

TRENCH AND ASPHALT PAVEMENT REPLACEMENT DETAIL

N.T.S.

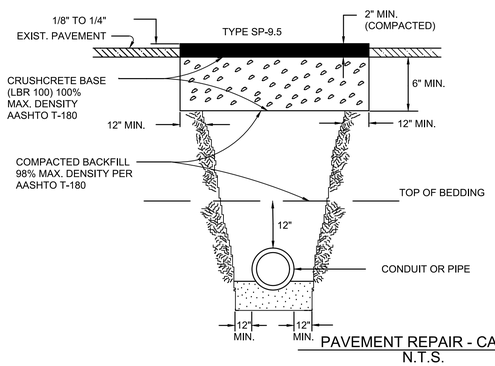

NOTE:
METHOD AND MATERIALS OF REPAIR SUBJECT TO
CITY OF JACKSONVILLE CONSTRUCTION REQUIREMENTS
FOR NEW PAVEMENT TYPE SP-9.5

PAVEMENT REPAIR - CASE I

N.T.S.

ANGELA B. BRYAN
LICENSE
No. 56730
STATE OF
FLORIDA
PROFESSIONAL ENGINEER

Signature
Angela B. Bryan, P.E.
FL Professional Eng. #56730

Date

REV NO	DATE	DRWN BY	CHKD BY	DESCRIPTION
1				
2				
3				
4				
5				
6				

JACKSONVILLE BEACH WATER AND SEWER IMPROVEMENTS

CONSTRUCTION DETAILS

CITY OF JACKSONVILLE BEACH
JACKSONVILLE BEACH, FLORIDA

DESIGN	DRAWN	
ABB	SLD	
JOB NUMBER	20-1009	
ISSUE DATE	OCTOBER 2020	
ISSUE	BID	

FOUR WATERS ENGINEERING
324 6th AVE N. JACKSONVILLE BEACH, FLORIDA 32250
904-414-2400 C.O.A.# 31101 WWW.4WENG.COM

DRAWING NUMBER
D-7

STEVE DUCHARME LOCATION R:\20-1009 JAX BCH SMALL WS\X\CDS\COVER AND DETAILS.DWG

EROSION AND SEDIMENT CONTROL NOTES

1. THE CONTRACTOR IS RESPONSIBLE FOR REMOVING SILT FROM SITE IF NOT REUSABLE ON-SITE AND ASSURING PLAN ALIGNMENT AND GRADE IN ALL DITCHES AND SWALES AT COMPLETION OF CONSTRUCTION.
2. THE SITE CONTRACTOR IS RESPONSIBLE FOR REMOVING THE TEMPORARY EROSION AND SEDIMENT CONTROL DEVICES AFTER COMPLETION OF CONSTRUCTION AND ONLY WHEN AREAS HAVE BEEN STABILIZED.
3. ADDITIONAL PROTECTION – ON-SITE PROTECTION IN ADDITION TO THE ABOVE MUST BE PROVIDED THAT WILL NOT PERMIT SILT TO LEAVE THE PROJECT CONFINES DUE TO UNSEEN CONDITIONS OR ACCIDENTS.
4. CONTRACTOR SHALL INSURE THAT ALL DRAINAGE STRUCTURES, PIPES, ETC. ARE CLEANED OUT AND WORKING PROPERLY AT TIME OF ACCEPTANCE.
5. WIRE MESH SHALL BE LAID OVER THE DROP INLET SO THAT THE WIRE EXTENDS A MINIMUM OF 1 FOOT BEYOND EACH SIDE OF THE INLET STRUCTURE. HARDWARE CLOTH OR COMPARABLE WIRE MESH WITH 1/2-INCH OPENINGS SHALL BE USED. IF MORE THAN ONE STRIP OF MESH IS NECESSARY, THE STRIPS SHALL BE OVERLAPPED.
6. FDOT NO. 1 COARSE AGGREGATE SHALL BE PLACED OVER THE WIRE MESH AS INDICATED IN D-903. THE DEPTH OF STONE SHALL BE AT LEAST 12 INCHES OVER THE ENTIRE INLET OPENING. THE STONE SHALL EXTEND BEYOND THE INLET OPENING AT LEAST 18 INCHES ON ALL SIDES.
7. IF THE STONE FILTER BECOMES CLOGGED WITH SEDIMENT SO THAT IT NO LONGER ADEQUATELY PERFORMS ITS FUNCTION, THE STONES MUST BE PULLED AWAY FROM THE INLET, CLEANED AND REPLACED.
8. BALES SHALL BE EITHER WIRE-BOUND OR STRING-TIED WITH THE BINDINGS ORIENTED AROUND THE SIDES RATHER THAN OVER AND UNDER THE BALES.
9. BALES SHALL BE PLACED LENGTHWISE IN A SINGLE ROW SURROUNDING THE INLET, WITH THE ENDS OF ADJACENT BALES PRESSED TOGETHER.
10. THE FILTER BARRIER SHALL BE ENTRENCHED AND BACKFILLED. A TRENCH SHALL BE EXCAVATED TO A MINIMUM DEPTH OF 8 INCHES. AFTER THE BALES ARE STAKED, THE EXCAVATED SOIL SHALL BE BACKFILLED AND COMPACTED AGAINST THE FILTER BARRIER.
11. EACH BALE SHALL BE SECURELY ANCHORED AND HELD IN PLACE BY AT LEAST TWO STAKES OR REBARS DRIVEN THROUGH THE BALE.
12. LOOSE STRAW SHOULD BE WEDGED BETWEEN BALES TO PREVENT WATER FROM ENTERING BETWEEN BALES.
13. STRAW BALE BARRIERS SHALL BE INSPECTED IMMEDIATELY AFTER EACH RAINFALL AND AT LEAST DAILY DURING PROLONGED RAINFALL.
14. CLOSE ATTENTION SHALL BE PAID TO THE REPAIR OF DAMAGED BALES, END RUNS AND UNDERCUTTING BENEATH BALES.
15. NECESSARY REPAIRS TO BARRIERS OR REPLACEMENT OF BALES SHALL BE ACCOMPLISHED PROMPTLY.
16. ANY SEDIMENT DEPOSITS REMAINING IN PLACE AFTER THE SYNTHETIC BALE BARRIER IS NO LONGER REQUIRED SHALL BE DRESSED TO CONFORM TO THE EXISTING GRADE, PREPARED AND SEEDED.
17. SILT FENCES AND FILTER BARRIERS SHALL BE INSPECTED IMMEDIATELY AFTER EACH RAINFALL AND AT LEAST DAILY DURING PROLONGED RAINFALL. ANY REQUIRED REPAIRS SHALL BE MADE IMMEDIATELY.
18. SHOULD THE FABRIC ON A SILT FENCE OR FILTER BARRIER DECOMPOSE OR BECOME INEFFECTIVE PRIOR TO THE END OF THE EXPECTED USABLE LIFE AND THE BARRIER STILL BE NECESSARY, THE FABRIC SHALL BE REPLACED PROMPTLY.
19. SEDIMENT DEPOSITS SHOULD BE REMOVED AFTER EACH STORM EVENT. THEY MUST BE REMOVED WHEN DEPOSITS REACH APPROXIMATELY ONE-THIRD THE HEIGHT OF THE BARRIER.
20. ANY SEDIMENT DEPOSITS REMAINING IN PLACE AFTER THE SILT FENCE OR FILTER BARRIER IS NO LONGER REQUIRED SHALL BE DRESSED TO CONFORM WITH THE EXISTING GRADE, PREPARED AND SEEDED.
21. THE STRUCTURE SHALL BE INSPECTED AFTER EACH RAIN AND REPAIRS MADE AS NEEDED.
22. SEDIMENT SHALL BE REMOVED AND THE TRAP RESTORED TO ITS ORIGINAL DIMENSIONS WHEN THE SEDIMENT HAS ACCUMULATED TO 1/3 THE DESIGN DEPTH OF THE TRAP. REMOVED SEDIMENT SHALL BE DEPOSITED IN A SUITABLE AREA AND IN SUCH A MANNER THAT IT WILL NOT ERODE.
23. THE CONTRACTOR IS RESPONSIBLE FOR FOLLOWING THE BEST EROSION AND SEDIMENT CONTROL PRACTICES AS OUTLINED IN THE PLANS, SPECIFICATIONS AND ST. JOHNS RIVER WATER MANAGEMENT DISTRICT SPECIFICATIONS AND CRITERIA.
24. FOR ADDITIONAL INFORMATION ON SEDIMENT AND EROSION CONTROL REFER TO "THE FLORIDA DEVELOPMENT MANUAL – A GUIDE TO SOUND LAND AND WATER MANAGEMENT" FROM THE STATE OF FLORIDA DEPARTMENT OF ENVIRONMENTAL REGULATION (F.D.E.R.) CHAPTER 6.
25. EROSION AND SEDIMENT CONTROL BARRIERS SHALL BE PLACED ADJACENT TO ALL WETLAND AREAS WHERE THERE IS POTENTIAL FOR DOWNSTREAM WATER QUALITY DEGRADATION. SEE DETAIL SHEET FOR TYPICAL CONSTRUCTION.
26. ALL DISTURBED AREAS SHALL BE GRASSED, FERTILIZED, MULCHED AND MAINTAINED UNTIL A PERMANENT VEGETATIVE COVER IS ESTABLISHED.
27. SOD SHALL BE PLACED IN AREAS WHICH MAY REQUIRE IMMEDIATE EROSION PROTECTION TO ENSURE WATER QUALITY STANDARDS ARE MAINTAINED.
28. ANY DISCHARGE FROM DEWATERING ACTIVITY SHALL BE FILTERED AND CONVEYED TO THE OUTFALL IN A MANNER WHICH PREVENTS EROSION AND TRANSPORTATION OF SUSPENDED SOLIDS TO THE RECEIVING OUTFALL.
29. DEWATERING PUMPS SHALL NOT EXCEED THE CAPACITY OF THAT WHICH REQUIRES A CONSUMPTIVE USE PERMIT FROM THE ST. JOHNS RIVER WATER MANAGEMENT DISTRICT.
30. ALL DISTURBED AREAS TO BE STABILIZED THROUGH COMPACTION, SILT SCREENS, SYNTHETIC BALES, AND GRASSING. ALL FILL SLOPES 3:1 OR STEEPER TO RECEIVE STAKED SOLID SOD.
31. ALL DEWATERING, EROSION, AND SEDIMENT CONTROL TO REMAIN IN PLACE AFTER COMPLETION OF CONSTRUCTION AND REMOVED ONLY WHEN AREAS HAVE STABILIZED.
32. THIS PLAN INDICATES THE MINIMUM EROSION AND SEDIMENT MEASURES REQUIRED FOR THIS PROJECT. THE CONTRACTOR IS RESPONSIBLE FOR MEETING ALL APPLICABLE RULES, REGULATIONS AND WATER QUALITY GUIDELINES AND MAY NEED TO INSTALL ADDITIONAL CONTROLS.
33. THE CONTRACTOR SHALL BE REQUIRED TO RESPOND TO ALL WATER MANAGEMENT DISTRICT INQUIRIES, RELATIVE TO COMPLIANCE OF SJRWMD FOR EROSION AND SEDIMENTATION CONTROL. THE COST OF THIS COMPLIANCE SHALL BE PART OF THE CONTRACT.

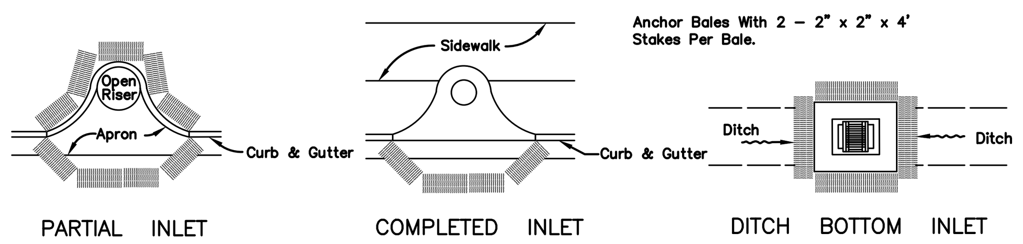

PROTECTION AROUND INLETS OR SIMILAR STRUCTURES

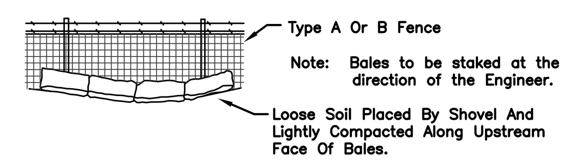

BALES BACKED BY FENCE

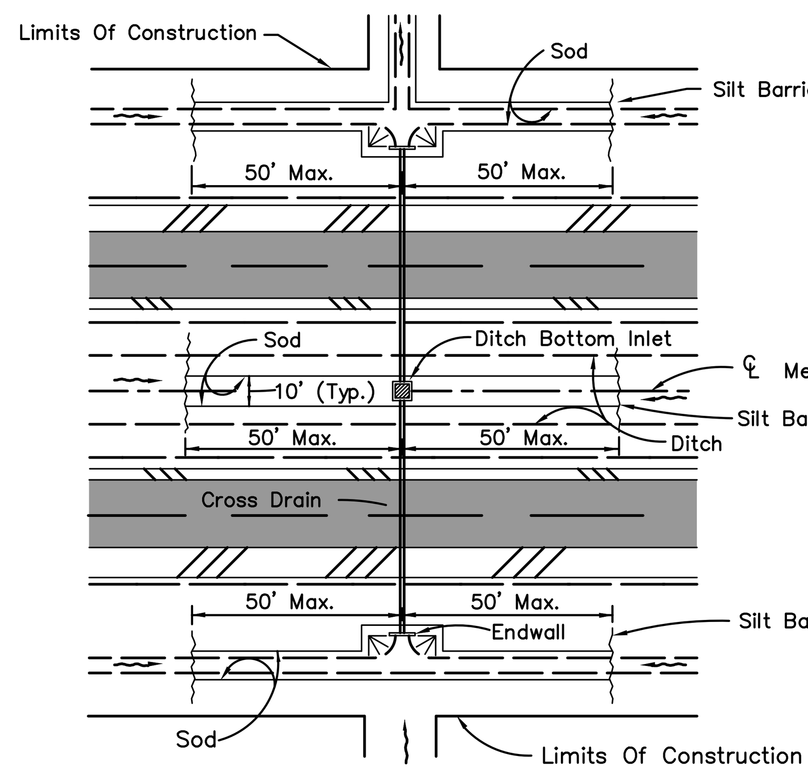

DITCH INSTALLATIONS AT DRAINAGE STRUCTURES

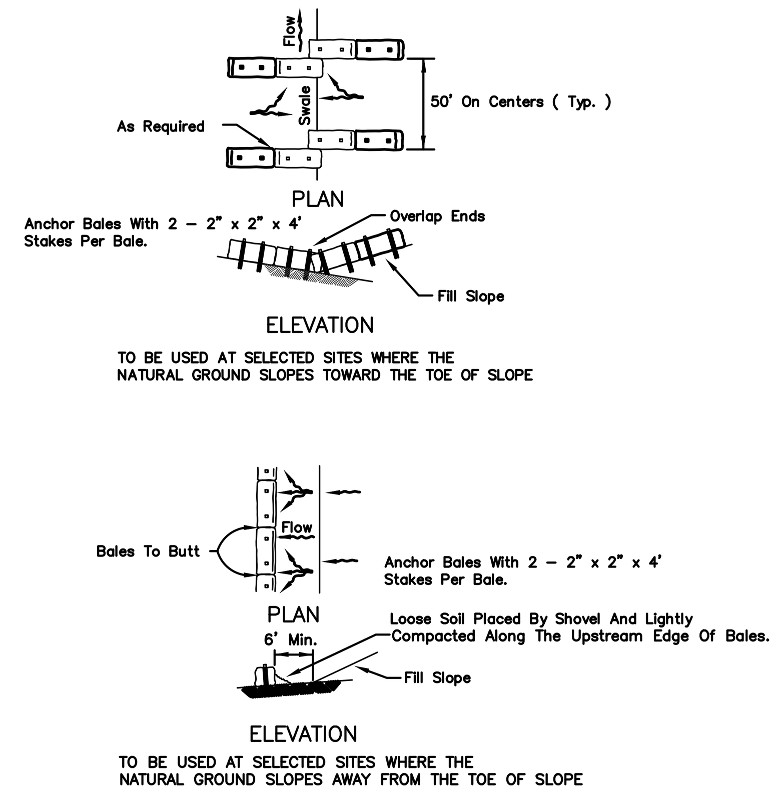

BARRIERS FOR FILL SLOPES

SYNTHETIC BALE LOCATION

(D-901)
N.T.S.

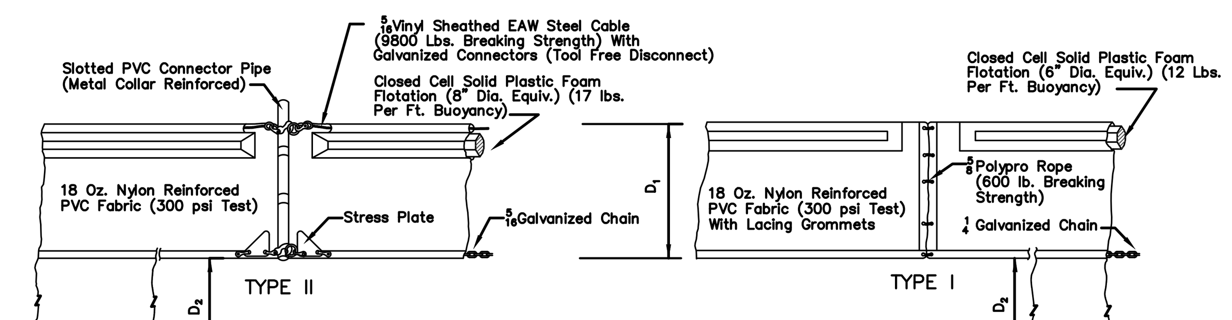

FLOATING TURBIDITY BARRIERS

NOTICE:
COMPONENTS OF TYPES I & TYPE II MAY BE SIMILAR OR IDENTICAL TO PROPRIETARY DESIGNS. ANY INFRINGEMENT ON THE PROPRIETARY RIGHTS OF THE DESIGNER SHALL BE THE SOLE RESPONSIBILITY OF THE USER. SUBSTITUTIONS FOR TYPES I AND II SHALL BE AS APPROVED BY THE ENGINEER.

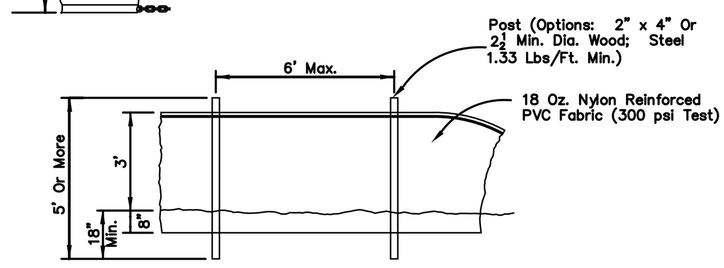

STAKED TURBIDITY BARRIER

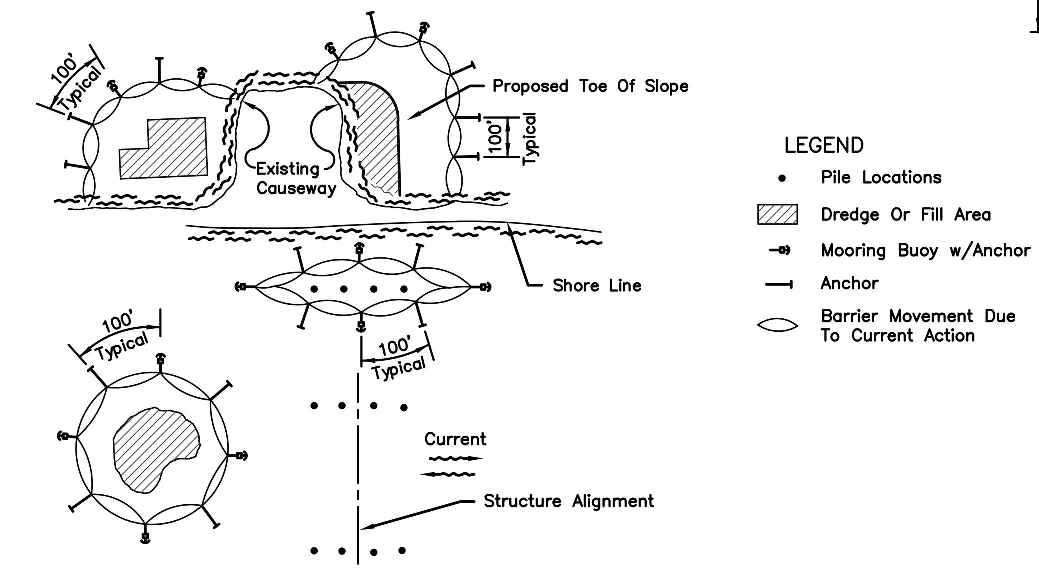

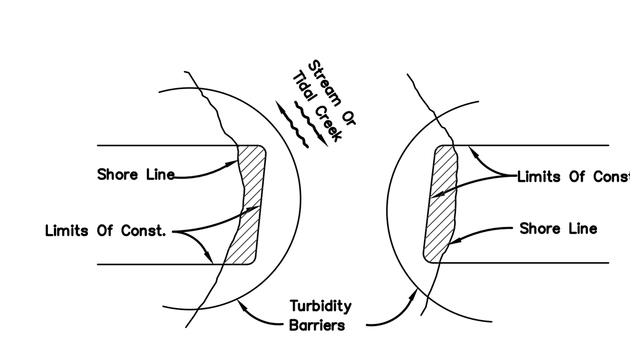

Note:
Turbidity barriers for flowing streams and tidal creeks may be either floating, or staked types or any combinations of types that will suit site conditions and meet erosion control and water quality requirements. The barrier type(s) will be at the Contractors option unless otherwise specified in the plans, however payment will be under the contract lump sum price established in the bid proposal for Erosion & Sediment Control Posts in staked turbidity barriers to be installed in vertical position unless otherwise directed by the Engineer.

NOTES:
1. Turbidity barriers are to be used in all permanent bodies of water regardless of water depth.
2. Number and spacing of anchors dependent on current velocities.
3. Deployment of barrier around pile locations may vary to accommodate construction operations.
4. Navigation may require segmenting barrier during construction operations.
5. For additional information see Section 104 of the FDOT Standard Specifications.

TURBIDITY BARRIER APPLICATIONS

TURBIDITY BARRIERS

(D-907)
N.T.S.

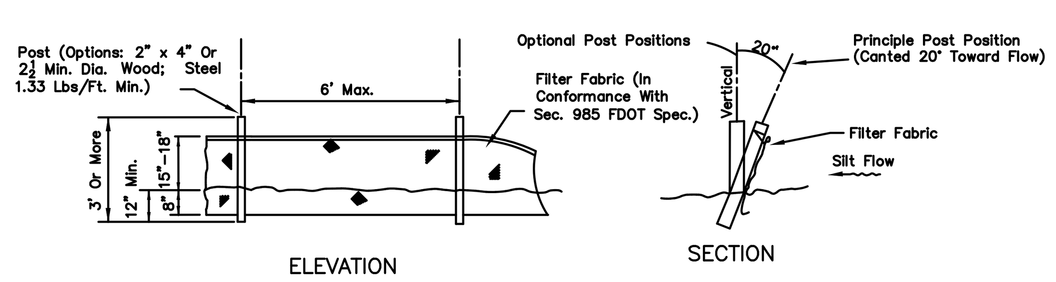

TYPE III SILT FENCE

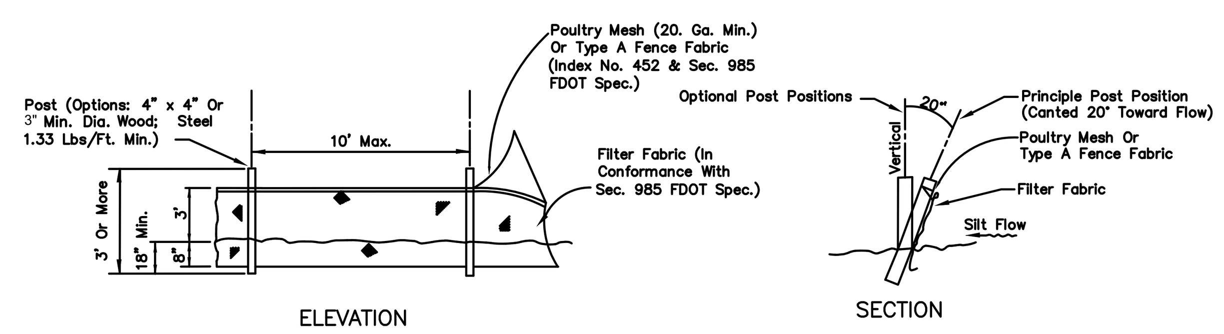

Note: Silt Fence to be paid for under the contract lump sum price for Erosion and Sediment Control.

TYPE IV SILT FENCE

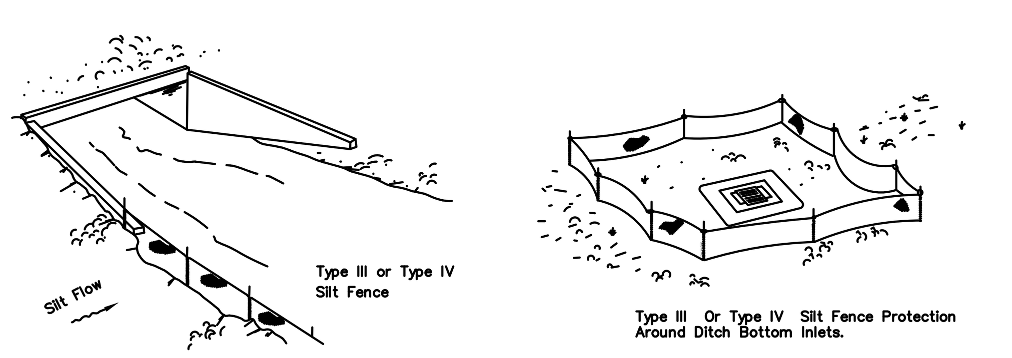

Do not deploy in a manner that silt fences will act as a dam across permanent flowing watercourses. Silt fences are to be used at upland locations and turbidity barriers used at permanent bodies of water.

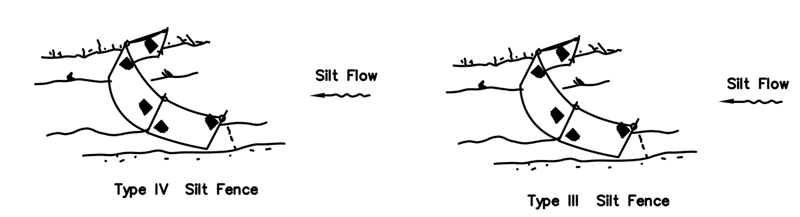

Note: Spacing for Type III & TYPE IV Fence to be in accordance with Chart 1, Sheet 1 of 3, FDOT Index No. 102 and ditch installations at drainage structures Sheet 2 of 3, FDOT Index No. 102.

SILT FENCE APPLICATIONS

SILT FENCE TYPE III & IV

(D-908)
N.T.S.

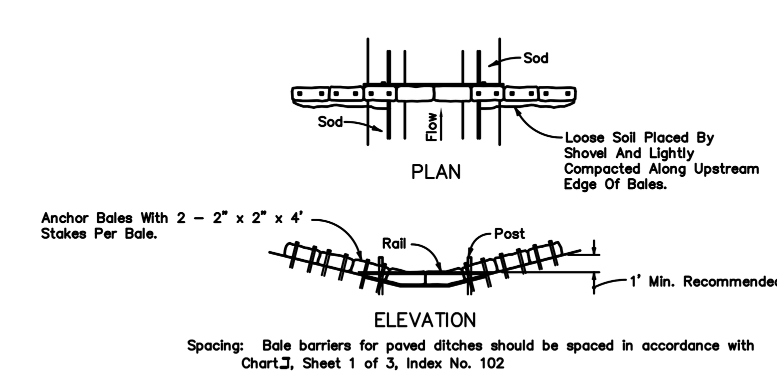

Spacing: Bale barriers for paved ditches should be spaced in accordance with Chart 1, Sheet 1 of 3, Index No. 102

BARRIER FOR PAVED DITCH

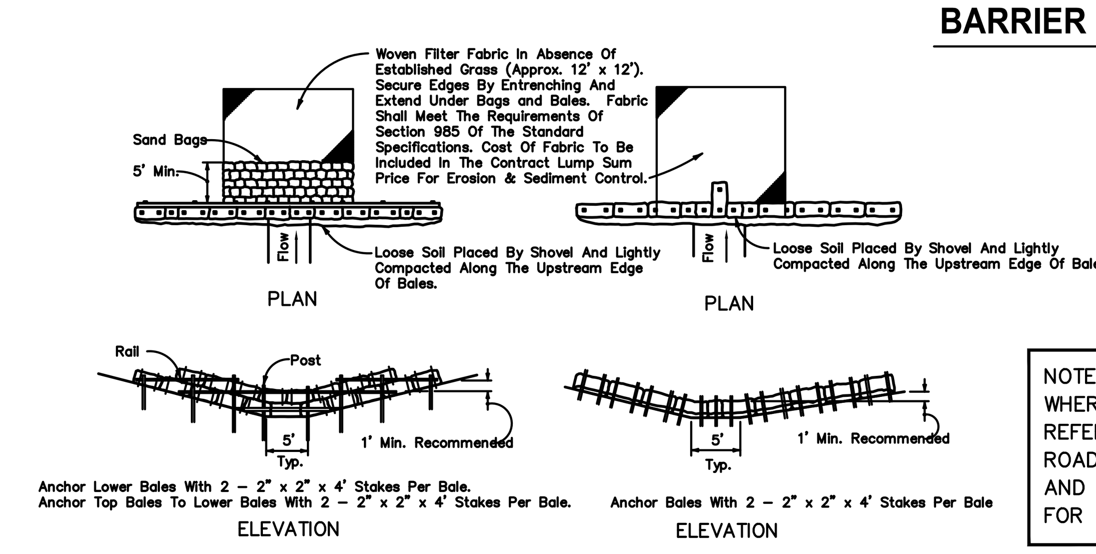

Application and Spacing: The use of Types I & II bale barriers should be limited to the conditions outlined in Chart I, Sheet 1 of 3, Index No. 102

TYPE II

TYPE I

BARRIER FOR UNPAVED DITCHES

SYNTHETIC BALE BARRIERS TYPE I & II

(D-912)
N.T.S.

NOTE:
WHERE FDOT SPECS AND INDEX ARE REFERENCED, PLEASE REFER TO FDOT ROADWAY & TRAFFIC DESIGN STANDARDS, AND FDOT STANDARD SPECIFICATIONS FOR ROAD & BRIDGE CONSTRUCTION.

ANGELA B. BRYAN LICENSE No. 56730 STATE OF FLORIDA PROFESSIONAL ENGINEER

Signature
Angela B. Bryan, P.E.
FL Professional Eng. #56730
Date

REV NO	DATE	DRWN BY	CHKD BY	DESCRIPTION
1				
2				
3				
4				
5				
6				

JACKSONVILLE BEACH WATER AND SEWER IMPROVEMENTS

CONSTRUCTION DETAILS

CITY OF JACKSONVILLE BEACH
JACKSONVILLE BEACH ,FLORIDA

DESIGN ABB	DRAWN SLD
JOB NUMBER	20-1009
ISSUE DATE	OCTOBER 2020
ISSUE	BID

FOUR WATERS ENGINEERING
324 6th AVE N. JACKSONVILLE BEACH, FLORIDA 32250
904-414-2400 C.O.A.# 31101 WWW.4WENG.COM

DRAWING NUMBER
D-8

STEVE DUCHARME LOCATION R:\20-1009 JAX BCH SMALL WS\X\CDS\COVER AND DETAILS.DWG

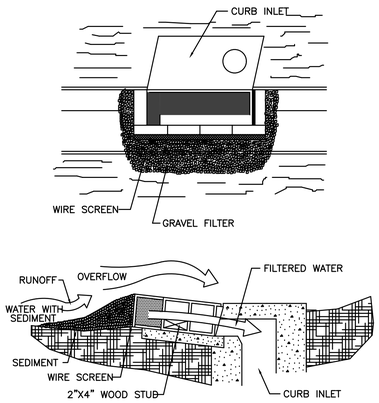

SPECIFIC APPLICATION

THIS METHOD OF INLET PROTECTION IS APPLICABLE AT CURB INLETS WHERE AN OVERFLOW CAPABILITY IS NECESSARY TO PREVENT EXCESSIVE PONDING IN FRONT OF THE STRUCTURE.

BLOCK & GRAVEL CURB INLET SEDIMENT FILTER

(D-902)
N.T.S.

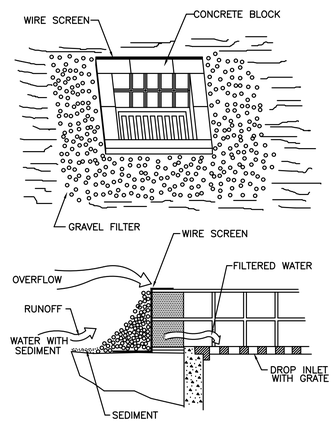

SPECIFIC APPLICATION

THIS METHOD OF INLET PROTECTION IS APPLICABLE WHERE HEAVY FLOWS ARE EXPECTED AND WHERE AN OVERFLOW CAPACITY IS NECESSARY TO PREVENT EXCESSIVE PONDING AROUND THE STRUCTURE.

BLOCK & GRAVEL DROP INLET SEDIMENT FILTER

(D-904)
N.T.S.

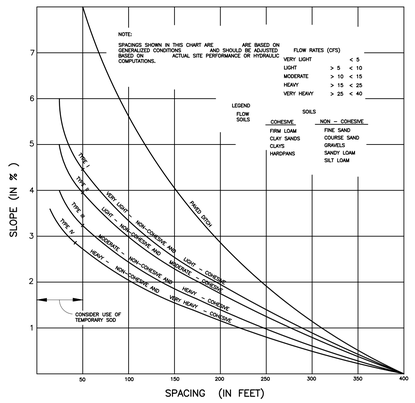

CHART I

RECOMMENDED SPACING FOR TYPE I AND TYPE II SYNTHETIC BALE BARRIERS, AND TYPE III AND TYPE IV SILT FENCES AND PAVED DITCH SYNTHETIC BALE BARRIERS

SPACING RECOMMENDATION FOR SILT FENCES & SYNTHETIC BALES

(D-906)
N.T.S.

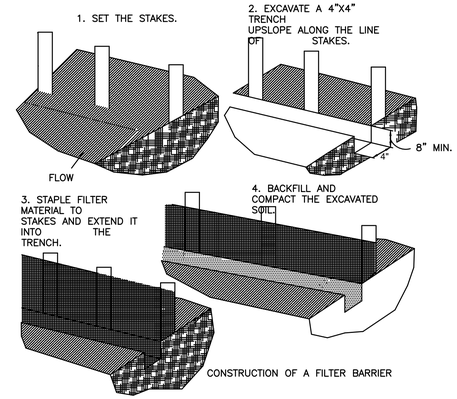

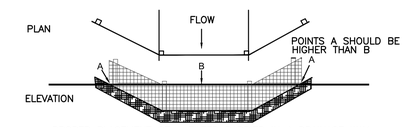

PROPER PLACEMENT OF A FILTER BARRIER IN A DRAINAGE WAY

FILTER BARRIER CONSTRUCTION DETAIL

(D-910)
N.T.S.

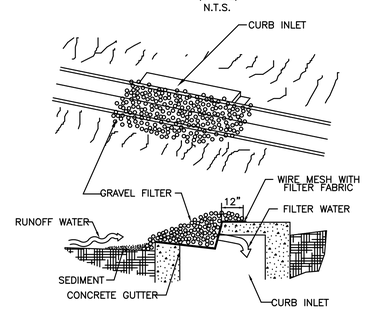

GRAVEL CURB INLET SEDIMENT FILTER

SPECIFIC APPLICATION

THIS METHOD OF INLET PROTECTION IS APPLICABLE AT CURB INLETS WHERE PONDING IN FRONT OF THE STRUCTURE IS NOT LIKELY TO CAUSE INCONVENIENCE OR DAMAGE TO ADJACENT STRUCTURES AND UNPROTECTED AREAS.

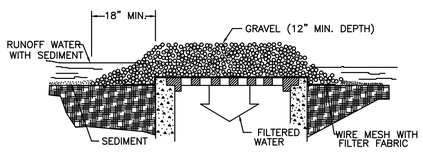

GRAVEL AND WIRE MESH DROP INLET SEDIMENT FILTER

SPECIFIC APPLICATION

THIS METHOD OF INLET PROTECTION IS APPLICABLE WHERE HEAVY CONCEN– TRATED FLOWS ARE EXPECTED, BUT NOT WHERE PONDING AROUND THE STRUCTURE MIGHT CAUSE EXCESSIVE INCONVENIENCE OR DAMAGE TO ADJACENT STRUCTURES AND UNPROTECTED AREAS.

GRAVEL INLET SEDIMENT TRAP

(D-903)
N.T.S.

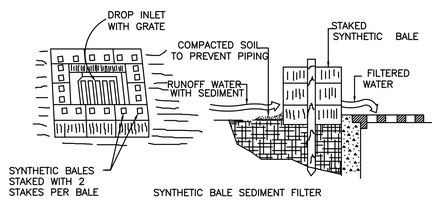

SPECIFIC APPLICATION

THIS METHOD OF INLET PROTECTION IS APPLICABLE WHERE THE INLET DRAINS A RELATIVELY FLAT AREA (SLOPES NO GREATER THAN 5 PERCENT) WHERE SHEET OR OVERLAND FLOWS (NOT EXCEEDING 0.5 cfs) ARE TYPICAL. THE METHOD SHALL NOT APPLY TO INLETS RECEIVING CONCENTRATED FLOWS, SUCH AS IN STREET OR HIGHWAY MEDIANS.

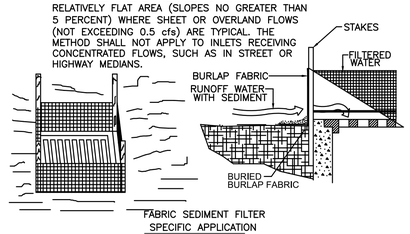

FABRIC SEDIMENT FILTER

SPECIFIC APPLICATION

THIS METHOD OF INLET PROTECTION IS APPLICABLE WHERE THE INLET DRAINS A RELATIVELY FLAT AREA (SLOPES NO GREATER THAN 5 PERCENT) WHERE SHEET OR OVERLAND FLOWS (NOT EXCEEDING 0.5 cfs) ARE TYPICAL. THE METHOD SHALL NOT APPLY TO INLETS RECEIVING CONCENTRATED FLOWS. SUCH AS IN STREET OR HIGHWAY MEDIANS.

DROP INLET SEDIMENT TRAP

(D-905)
N.T.S.

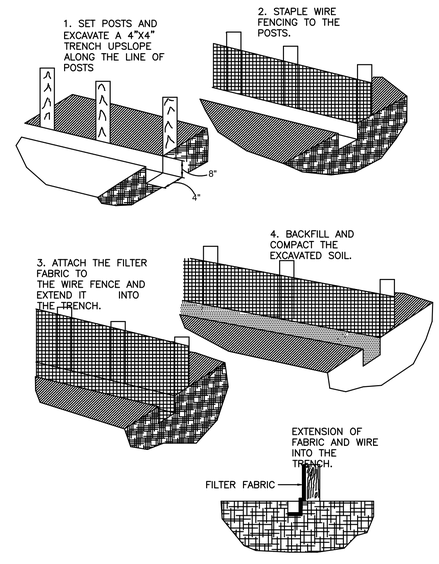

CONSTRUCTION DETAILS FOR SILT FENCES

(D-909)
N.T.S.

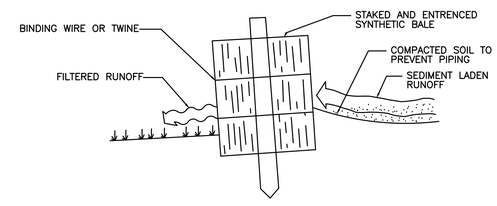

CROSS–SECTION OF A PROPERLY INSTALLED STRAW BALE

STAKED SYNTHETIC BALE

(D-911)
N.T.S.

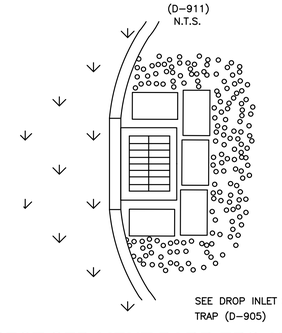

ERECT SEDIMENT BARRIERS AT CATCH BASINS

(TYPICAL)
N.T.S.

ANGELA B. BRYAN
LICENSE
No. 56730
STATE OF FLORIDA
PROFESSIONAL ENGINEER

Signature	Date
Angela B. Bryan, P.E. FL Professional Eng. #56730	

REV NO	DATE	DRWN BY	CHKD BY	DESCRIPTION
1				
2				
3				
4				
5				
6				

JACKSONVILLE BEACH WATER AND SEWER IMPROVEMENTS

CONSTRUCTION DETAILS

CITY OF JACKSONVILLE BEACH
JACKSONVILLE BEACH, FLORIDA

DESIGN	DRAWN
ABB	SLD
JOB NUMBER	20-1009
ISSUE DATE	OCTOBER 2020
ISSUE	BID

FOUR WATERS ENGINEERING
324 6th AVE N. JACKSONVILLE BEACH, FLORIDA 32250
904-414-2400 C.O.A.# 31101 WWW.4WENG.COM

DRAWING NUMBER
D-9

STEVE DUCHARME LOCATION R:\20-1009 JAX BCH SMALL WS\X-DGS\COVER AND DETAILS.DWG

NOTES:

1. ALL TRAFFIC CONTROL DEVICES SHALL BE MADE AND ERECTED IN ACCORDANCE WITH THE MUTCD.
2. TEMPORARY TRAFFIC CONTROL SIGNS SIZES SHALL BE AS NOTED ON MUTCD TABLE 6F-1 (CONVENTIONAL ROAD)
3. ALL PORTABLE SIGNS SHALL BE MOUNTED A MINIMUM OF 1 FOOT ABOVE THE LEVEL OF PAVEMENT EDGE FOR DIRECTIONAL TRAFFIC OF TWO (2) LANES OR LESS AND A MINIMUM OF 7 FEET FOR DIRECTIONAL OF THREE (3) OR MORE LANES. ALL PORTABLE SIGNS AND SIGN MOUNTING DEVICES UTILIZED IN THE WORK SHALL BE NCHRP 350 COMPLIANT. PORTABLE SIGNS MAY BE USED WHEN THE DURATION OF WORK IS LESS THAN 3 DAYS.
4. WHEN NOT IN USE, PORTABLE SIGNS SHALL BE REMOVED FROM THE TRAVELWAY SO THAT THE MESSAGE IS NOT VISIBLE TO THE MOTORIST. INTERIM SIGNS THAT ARE PERMANENT MOUNTED SHALL BE COVERED WHEN NOT APPLICABLE.

REV NO	DATE	DRWN BY	CHKD BY	DESCRIPTION
1				
2				
3				
4				
5				
6				

Signature
Angela B. Bryan, P.E.
FL Professional Eng. #56730

Date

JACKSONVILLE BEACH WATER AND SEWER IMPROVEMENTS

7TH AVENUE SOUTH WATER IMPROVEMENTS
MOT PLAN

CITY OF JACKSONVILLE BEACH
JACKSONVILLE BEACH, FLORIDA

DESIGN	DRAWN
ABB	SLD
JOB NUMBER	20-1009
ISSUE DATE	OCTOBER 2020
ISSUE	BID

FOUR WATERS ENGINEERING
324 6th AVE N. JACKSONVILLE BEACH, FLORIDA 32250
904-414-2400 C.O.A.# 31101 WWW.4WENG.COM

DRAWING NUMBER
MOT-1

STEVE DUCHARME LOCATION: R:\20-1009 JAX BCH SMALL WES\CADD\7TH ONLY-MOT.DWG

NOTES:

1. ALL TRAFFIC CONTROL DEVICES SHALL BE MADE AND ERECTED IN ACCORDANCE WITH THE MUTCD.
2. TEMPORARY TRAFFIC CONTROL SIGNS SIZES SHALL BE AS NOTED ON MUTCD TABLE 6F-1 (CONVENTIONAL ROAD)
3. ALL PORTABLE SIGNS SHALL BE MOUNTED A MINIMUM OF 1 FOOT ABOVE THE LEVEL OF PAVEMENT EDGE FOR DIRECTIONAL TRAFFIC OF TWO (2) LANES OR LESS AND A MINIMUM OF 7 FEET FOR DIRECTIONAL OF THREE (3) OR MORE LANES. ALL PORTABLE SIGNS AND SIGN MOUNTING DEVICES UTILIZED IN THE WORK SHALL BE NCHRP 350 COMPLIANT. PORTABLE SIGNS MAY BE USED WHEN THE DURATION OF WORK IS LESS THAN 3 DAYS.
4. WHEN NOT IN USE, PORTABLE SIGNS SHALL BE REMOVED FROM THE TRAVELWAY SO THAT THE MESSAGE IS NOT VISIBLE TO THE MOTORIST. INTERIM SIGNS THAT ARE PERMANENT MOUNTED SHALL BE COVERED WHEN NOT APPLICABLE.

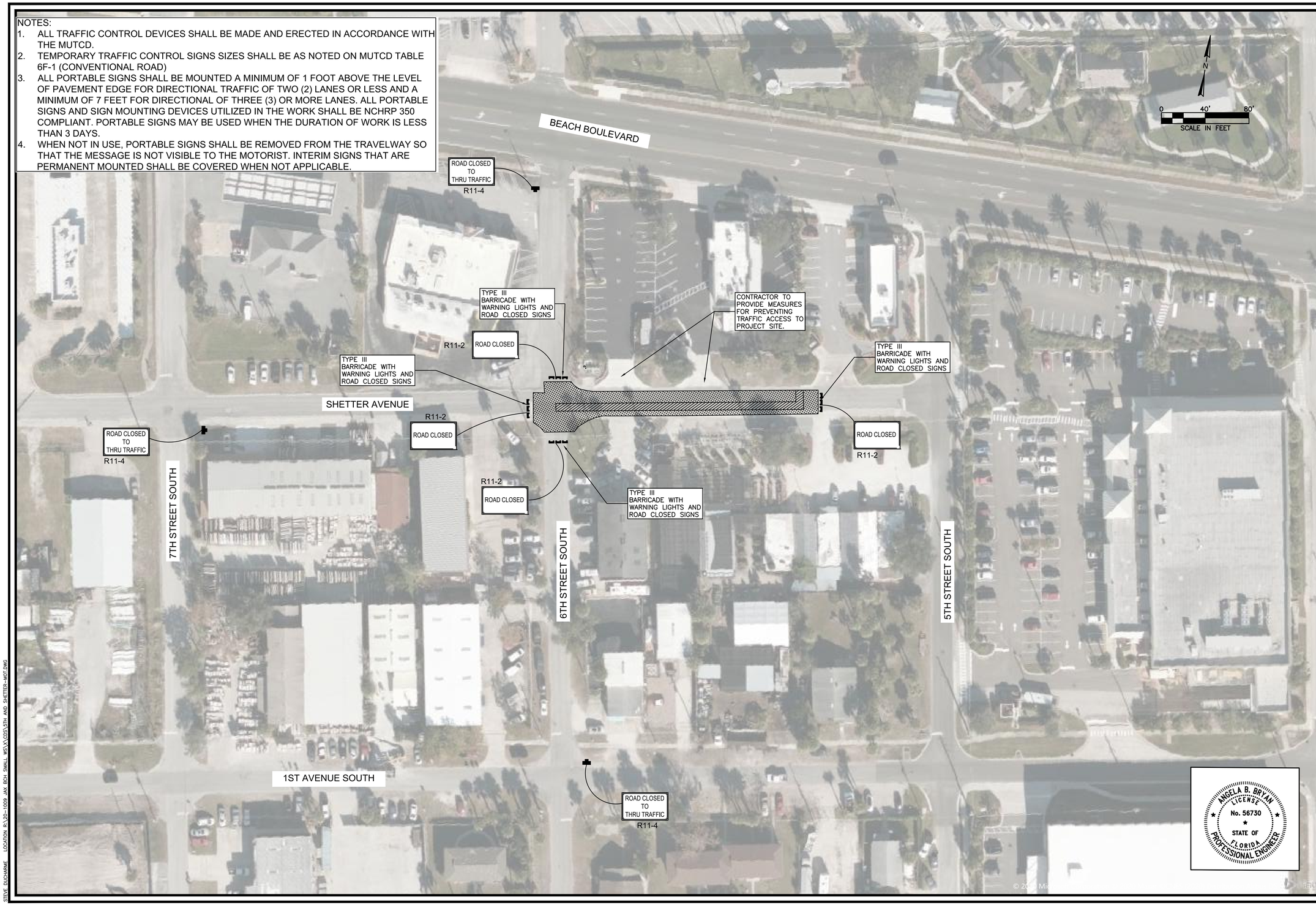

REV NO	DATE	DRWN BY	CHKD BY	DESCRIPTION
1				
2				
3				
4				
5				
6				

Signature
Angela B. Bryan, P.E.
FL Professional Eng. #56730

Date

JACKSONVILLE BEACH WATER AND SEWER IMPROVEMENTS

SHETTER AVENUE SEWER IMPROVEMENTS
MOT PLAN

CITY OF JACKSONVILLE BEACH
JACKSONVILLE BEACH, FLORIDA

DESIGN ABB	DRAWN SLD		
JOB NUMBER	20-1009		
ISSUE DATE	OCTOBER 2020		
ISSUE	BID		

FOUR WATERS ENGINEERING
324 6th AVE N. JACKSONVILLE BEACH, FLORIDA 32250
904-414-2400 C.O.A.# 31101 WWW.4WENG.COM

DRAWING NUMBER
MOT-2

STEVE DUCHARME LOCATION: R:\20-1009 JAX BCH SMALL WES\X\C03\STH AND SHETTER-MOT.DWG

NOTES:

1. ALL TRAFFIC CONTROL DEVICES SHALL BE MADE AND ERECTED IN ACCORDANCE WITH THE MUTCD.
2. TEMPORARY TRAFFIC CONTROL SIGNS SIZES SHALL BE AS NOTED ON MUTCD TABLE 6F-1 (CONVENTIONAL ROAD)
3. ALL PORTABLE SIGNS SHALL BE MOUNTED A MINIMUM OF 1 FOOT ABOVE THE LEVEL OF PAVEMENT EDGE FOR DIRECTIONAL TRAFFIC OF TWO (2) LANES OR LESS AND A MINIMUM OF 7 FEET FOR DIRECTIONAL OF THREE (3) OR MORE LANES. ALL PORTABLE SIGNS AND SIGN MOUNTING DEVICES UTILIZED IN THE WORK SHALL BE NCHRP 350 COMPLIANT. PORTABLE SIGNS MAY BE USED WHEN THE DURATION OF WORK IS LESS THAN 3 DAYS.
4. WHEN NOT IN USE, PORTABLE SIGNS SHALL BE REMOVED FROM THE TRAVELWAY SO THAT THE MESSAGE IS NOT VISIBLE TO THE MOTORIST. INTERIM SIGNS THAT ARE PERMANENT MOUNTED SHALL BE COVERED WHEN NOT APPLICABLE.

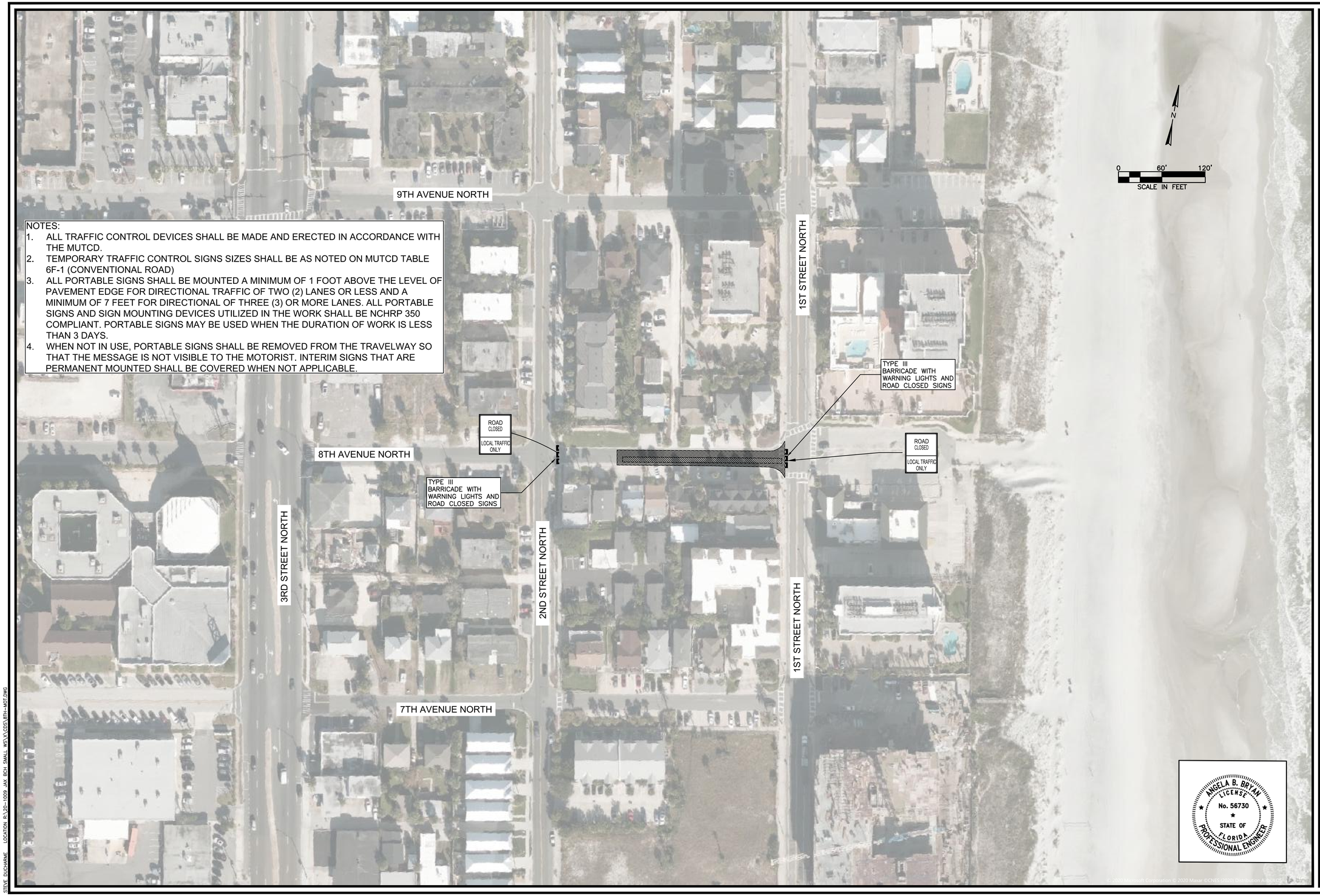

ANGELA B. BRYAN
LICENSE
No. 56730
STATE OF FLORIDA
PROFESSIONAL ENGINEER

REV NO	DATE	DRWN BY	CHKD BY	DESCRIPTION
1				
2				
3				
4				
5				
6				

Signature
Angela B. Bryan, P.E.
FL Professional Eng. #56730

Date

JACKSONVILLE BEACH WATER AND SEWER IMPROVEMENTS

8TH AVENUE NORTH SEWER IMPROVEMENTS
MOT PLAN

CITY OF JACKSONVILLE BEACH
JACKSONVILLE BEACH, FLORIDA

DESIGN ABB	DRAWN SLD
JOB NUMBER	20-1009
ISSUE DATE	OCTOBER 2020
ISSUE	BID

FOUR WATERS ENGINEERING
324 6th AVE N. JACKSONVILLE BEACH, FLORIDA 32250
904-414-2400 C.O.A.# 31101 WWW.4WENG.COM

DRAWING NUMBER
MOT-3

STEVE DUCHARME LOCATION: R:\20-1009 JAX BCH SMALL WS\X\C03\8th-MOT.DWG